SCHOOL TOWN OF MUNSTER
2025 NEW TENNIS FACILITY
MUNSTER HIGH SCHOOL
8823 COLUMBIA AVE. MUNSTER, IN 46321

DRAWING INDEX		
SHEET	DESCRIPTION	DATE
T-1.0	TITLE SHEET	9-15-25
C-1.0 - C-1.1	SITE DEMOLITION PLAN	9-15-25
C-2.0 - C-2.1	SITE GEOMETRIC PLAN	9-15-25
C-3.0 - C-3.1	SITE DEVELOPMENT PLAN	9-15-25
C-3.2	SITE DEVELOPMENT DETAILS	9-15-25
C-4.0 - C-4.1	SITE GRADING PLAN	9-15-25
C-5.0 - C-5.1	SITE UTILITY PLAN	9-15-25
C-5.2 - C-5.3	SITE UTILITY DETAILS	9-15-25
C-6.0 - C-6.1	STORMWATER POLLUTION PREVENTION PLAN	9-15-25
C-6.2	STORMWATER POLLUTION PREVENTION DETAILS	9-15-25
C-7.0	PROJECT SPECIFICATIONS	9-15-25
	TOPOGRAPHICAL SURVEY (PREPARED BY TORRENGA SURVEYING, LLC)	6-25-25

SITE LOCATION MAP

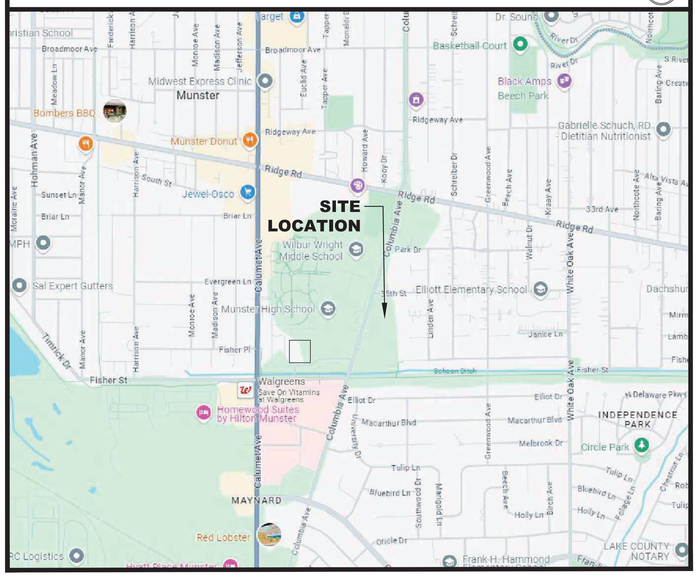

SCALE 1"=1000'

MAP DATA © 2024 GOOGLE

SECTION 19
TOWNSHIP 36N
RANGE 9W

CIVIL ENGINEERING STATEMENT AND SEAL

I, JAMES GLASCOTT, P.E., DULY LICENSED IN THE STATE OF INDIANA BY THE INDIANA PROFESSIONAL LICENSING AGENCY, DO HEREBY STATE THAT THIS DOCUMENT WAS PREPARED BY ME OR UNDER MY DIRECT SUPERVISION.

DATE: 09/15/25

JAMES GLASCOTT - INDIANA P.E. # 12400652
DATE OF EXPIRATION - JULY 31, 2026

JAMES GLASCOTT REGISTERED PE12400652 STATE OF INDIANA PROFESSIONAL ENGINEER

Indiana811 Know what's below. Call before you dig.
To Submit a Locate Request
24 Hours a Day, Seven Days a Week:
Call 811 or 800-382-5544

*CONTRACTOR MUST LOCATE PRIVATE UTILITIES IN AREA OF CONSTRUCTION PRIOR TO PROCEEDING WITH WORK

WT GROUP JOB NUMBER - C2400072

WT Group
Engineering • Design • Consulting

WT GROUP
Structural | Mechanical|Electrical|Plumbing
Civil | Land Survey | Telecommunications| Aquatic
Accessibility Consulting | Design & Program Management.
Engineering with Precision, Pace & Passion.
2675 Pratum Avenue | Hoffman Estates, IL 60192
P: 224.293.6333 | F: 224.293.6444
wtengineering.com

© COPYRIGHT 2025 THE W-T GROUP, LLC

DLA ARCHITECTS Ltd.
www.dla-ltd.com
form follows learning℠
Two Pierce Place | Suite 1300 | Itasca | 60143 | 847.742.4063

SCHOOL TOWN OF MUNSTER
2025 NEW TENNIS FACILITY
MUNSTER HIGH SCHOOL
8823 COLUMBIA AVE. MUNSTER, IN 46321

SCHOOL TOWN OF MUNSTER

DATE:	DESCRIPTION:
9/15/25	TOWN SUBMITTAL

ISSUED FOR BID

PROJECT # 2024.073
DATE: AUGUST 12, 2025
SHEET TITLE: TITLE SHEET
SHEET: T-1.0

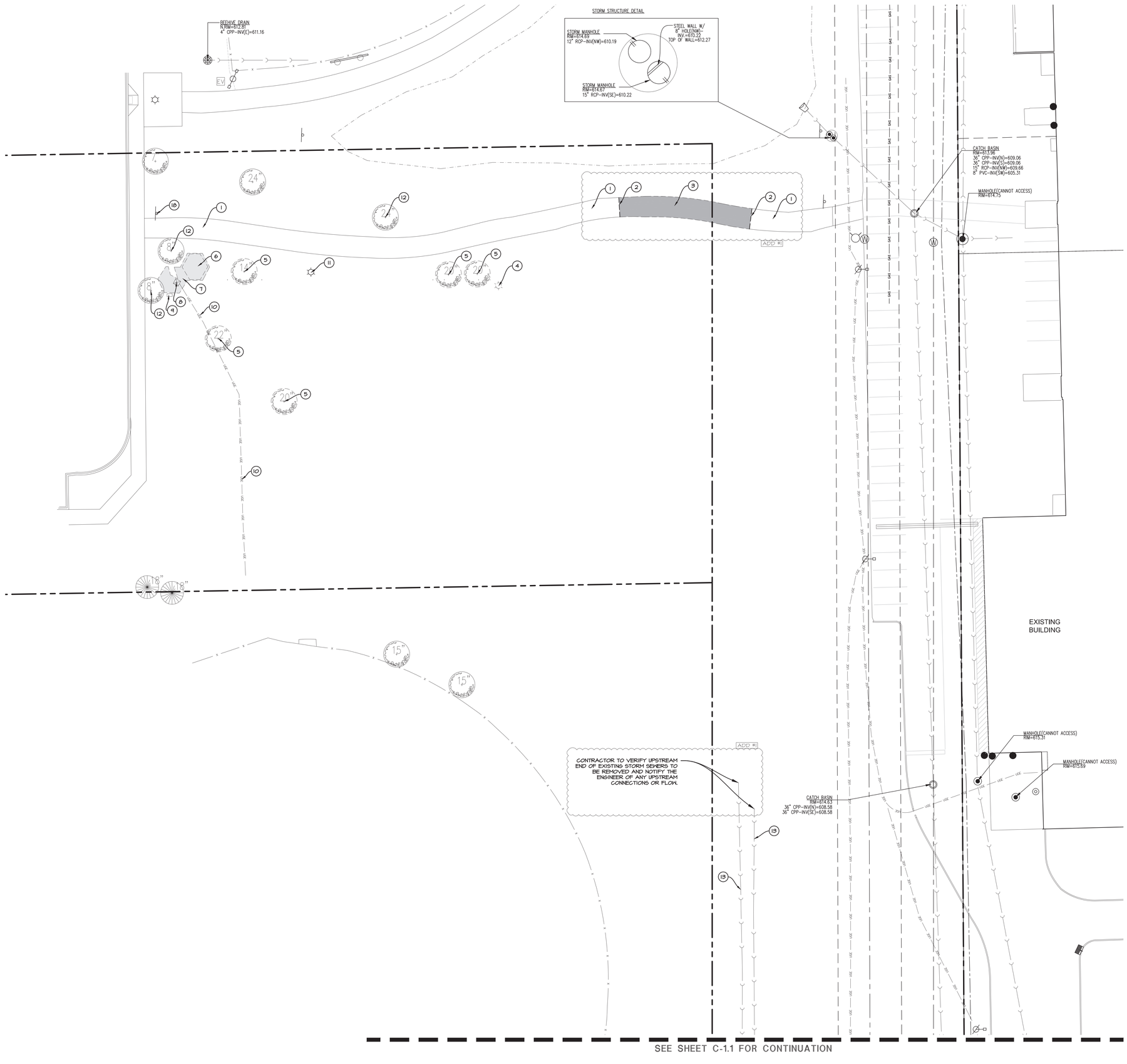

SEE SHEET C-1.1 FOR CONTINUATION

SITE DEMOLITION NOTES:

A. CONTRACTOR SHALL PERFORM ALL DEMOLITION WORK IN ACCORDANCE WITH ALL APPLICABLE FEDERAL, STATE, AND LOCAL REQUIREMENTS.
B. THE CONTRACTOR SHALL OBTAIN ALL NECESSARY DEMOLITION PERMITS AND COORDINATE ALL DEMOLITION WITH THE MUNICIPALITY AND OWNERS REPRESENTATIVE TO ENSURE PROTECTION AND MAINTENANCE OF SANITARY AND WATER UTILITIES AS NECESSARY AND TO PROVIDE STORM WATER CONVEYANCE UNTIL NEW FACILITIES ARE CONSTRUCTED, TESTED, AND PLACED IN OPERATION.
C. CONTRACTOR SHALL DEVELOP AND IMPLEMENT A DAILY PROGRAM OF DUST CONTROL PROCEDURES PRIOR TO DEMOLITION OF ANY STRUCTURES. MODIFICATION OF DUST CONTROL PROCEDURES SHALL BE PERFORMED BY THE CONTRACTOR TO THE SATISFACTION OF THE MUNICIPALITY AND COMPLY WITH THE NPDES II REQUIREMENTS OF THE ILLINOIS ENVIRONMENTAL PROTECTION AGENCY AND THE INDIVIDUAL STORM WATER POLLUTION PREVENTION PLAN FOR THIS PROJECT.
D. ALL EXISTING TREES, BRUSH AND MISCELLANEOUS VEGETATION TO BE REMOVED OR DEMOLISHED SHALL BE REMOVED FROM THE SITE AND LEGALLY DISPOSED OF BY THE CONTRACTOR.
E. VOIDS LEFT BY ANY ITEM REMOVED UNDER ANY PROPOSED BUILDING, PAVEMENT, OR WALK OR WITHIN 24" THEREOF SHALL BE BACKFILLED WITH ENGINEERED FILL ACCORDING TO THE GEOTECHNICAL REPORT.
F. ALL EXISTING BUILDINGS, FOUNDATIONS, CONCRETE OR ASPHALT PAVEMENT OR WALKS, CURB AND GUTTER AND MISCELLANEOUS STRUCTURES (INCLUDING, BUT NOT LIMITED TO FENCES, POLES, YARD LIGHTS, ELECTRICAL PANELS, AND MISCELLANEOUS DEBRIS) INDICATED TO BE DEMOLISHED SHALL BE REMOVED OR DEMOLISHED AND REMOVED FROM THE SITE AND DISPOSED OF LEGALLY BY THE CONTRACTOR.
G. CONTACT GAS COMPANY PRIOR TO DEMOLITION. LOCATION OF EXISTING GAS SERVICES ARE UNKNOWN.
H. ALL EXISTING TREES SHALL REMAIN UNLESS OTHERWISE NOTED.
I. ALL EXISTING UTILITIES SHALL REMAIN UNLESS OTHERWISE NOTED.
J. CONTRACTOR SHALL HIRE A PRIVATE UTILITY LOCATOR TO LOCATE UTILITIES PRIOR TO CONSTRUCTION AND SHALL CONTACT THE SITE ENGINEER IF A CONFLICT EXISTS.
K. CONTRACTOR SHALL PROVIDE REMOVAL AND REPLACEMENT AND SHORING AS NECESSARY TO MEET OSHA AND LOCAL CODE, AS WELL AS MANUFACTURER'S REQUIREMENTS.
L. ALL FOUNDATIONS FOR ALL FENCES, SIGNS, ETC. NOTED FOR REMOVAL SHALL BE REMOVED AND LEGALLY DISPOSED OF OFFSITE.
M. PROOF-ROLLING SHALL BE PERFORMED FOR ALL SUBGRADE PRIOR TO CONSTRUCTION OF NEW PAVEMENT. ALL SUBGRADE PROOF-ROLLING SHALL BE WITNESSED AND APPROVED BY A MATERIALS TESTING AGENCY TO BE HIRED BY THE OWNER. CONTRACTOR TO COORDINATE ALL PROOF-ROLLING WITH THE MATERIALS TESTING AGENCY. CONTACT THE ENGINEER AND MATERIAL TESTING AGENCY SO THAT THEY MAY WITNESS THE PROOF ROLL. PROOF ROLL SHALL BE PROVIDED FOR ALL PAVEMENT AREAS SPECIFIED FOR FULL DEPTH REMOVAL AND REPLACEMENT.
N. EXISTING CONDITIONS AND TOPOGRAPHY SHOWN REPRESENTS SITE CONDITIONS PER THE TOPOGRAPHICAL SURVEY LAST DATED 06-25-2025, PREPARED BY TORRENGA SURVEYING, LLC. CONTRACTOR SHALL FIELD VERIFY EXISTING ELEVATIONS AND CONDITIONS (INCLUDING BUT NOT LIMITED TO VERIFICATION OF CONTROL AND ALL UTILITIES WHETHER DEPICTED OR NOT) PRIOR TO CONSTRUCTION AND NOTIFY ENGINEER OF ANY DISCREPANCIES.
O. SEE SHEETS 3 OF 3 TOPOGRAPHICAL SURVEY FOR ALL EXISTING LOCATED UTILITY DATA.
P. CLEAR SITE AS NECESSARY TO CONSTRUCT PROPOSED IMPROVEMENTS.
Q. ALL ITEMS MARK "EXISTING OR EXISTING TO REMAIN" TO BE PROTECTED FROM DAMAGE FOR THE DURATION OF CONSTRUCTION.
R. EXISTING PAVEMENT AGGREGATE BASE COURSE SHALL NOT BE RE-USED AS AGGREGATE BASE COURSE FOR THE NEW PAVEMENT SECTION.

◯PROJECT NOTES:

1. EXISTING ASPHALT PATH TO REMAIN.
2. NEW FULL DEPTH SAWCUT TO PROVIDE CLEAN CONSTRUCTION BREAK.
3. EXISTING ASPHALT PAVEMENT TO BE REMOVED FULL DEPTH TO MEET THE BOTTOM OF THE NEW PAVEMENT CROSS SECTIONS (NEW SUBGRADE ELEVATION). SEE THE SITE GRADING PLAN FOR NEW FINISHED ELEVATIONS AND DETAIL SHEETS FOR NEW PAVEMENT CROSS SECTIONS.
4. EXISTING AREA LIGHT TO BE REMOVED.
5. EXISTING TREE TO BE REMOVED.
6. EXISTING GAZEBO TO BE REMOVED.
7. EXISTING CONCRETE PAVEMENT TO BE REMOVED FULL DEPTH TO MEET THE BOTTOM OF THE NEW PAVEMENT CROSS SECTIONS (NEW SUBGRADE ELEVATION). SEE THE SITE GRADING PLAN FOR NEW FINISHED ELEVATIONS AND DETAIL SHEETS FOR NEW PAVEMENT CROSS SECTIONS.
8. EXISTING ELECTRIC TRANSFORMER TO BE REMOVED.
9. EXISTING ELECTRIC PEDESTAL TO BE REMOVED.
10. EXISTING UNDERGROUND ELECTRIC LINE TO BE REMOVED.
11. EXISTING AREA LIGHT TO REMAIN.
12. EXISTING TREE TO REMAIN.
13. EXISTING STORM SEWER TO BE REMOVED.
14. EXISTING STORM STRUCTURE TO REMAIN.
15. EXISTING STORM SEWER TO REMAIN.
16. EXISTING CURB AND GUTTER TO BE REMOVED.
17. NEW 2' WIDE BUTT JOINT.
18. EXISTING SIGN TO REMAIN.
19. EXISTING ASPHALT PAVEMENT TO REMAIN.
20. EXISTING CURB AND GUTTER TO REMAIN

DEMOLITION LEGEND

- EXISTING STORM SEWER
- EXISTING SANITARY SEWER
- EXISTING WATER MAIN
- EXISTING GAS SERVICE
- EXISTING UNDERGROUND ELECTRIC SERVICE
- EXISTING UNDERGROUND TELCO SERVICE
- EXISTING OVERHEAD LINES
- EXISTING CATCH BASIN / INLET
- EXISTING BEEHIVE CATCH BASIN
- EXISTING MANHOLE
- EXISTING CONCRETE PAVEMENT TO BE REMOVED FULL DEPTH
- EXISTING ASPHALT PAVEMENT TO BE REMOVED FULL DEPTH

Indiana811

CALL
48 HOURS BEFORE
YOU DIG

CONTRACTOR MUST LOCATE PRIVATE UTILITIES IN AREA OF CONSTRUCTION PRIOR TO PROCEEDING WITH WORK.

NORTH

1" = 20'

00 10 20 40 80

JAMES GLASCOTT
REGISTERED
PE12400652
STATE OF INDIANA
PROFESSIONAL ENGINEER

WT GROUP JOB NUMBER - C2400072

WT Group
Engineering • Design • Consulting

WT GROUP
Structural | Mechanical|Electrical|Plumbing
Civil | Land Survey | Telecommunication| Aquatic
Accessibility Consulting | Design & Program Management
Engineering with Precision, Pace & Passion.
2675 Prairie Avenue | Hoffman Estates, IL 60192
P: 224.293.5333 | F: 224.293.5444
wtengineering.com

© COPYRIGHT 2025 THE W-T GROUP, LLC

DLA ARCHITECTS
www.dla-ltd.com
form follows learning
Two Pierce Place | Suite 1300 | Itasca | 60143 | 847.742.4063

SCHOOL TOWN OF MUNSTER
2025 NEW TENNIS FACILITY
MUNSTER HIGH SCHOOL
8823 COLUMBIA AVE. MUNSTER, IN 46321

SCHOOL TOWN MUNSTER

DATE:	DESCRIPTION:
9/15/25	TOWN SUBMITTAL

ISSUED FOR BID

PROJECT # 2024.073
DATE: AUGUST 12, 2025
SHEET TITLE: SITE DEMOLITION PLAN
SHEET: C-1.0

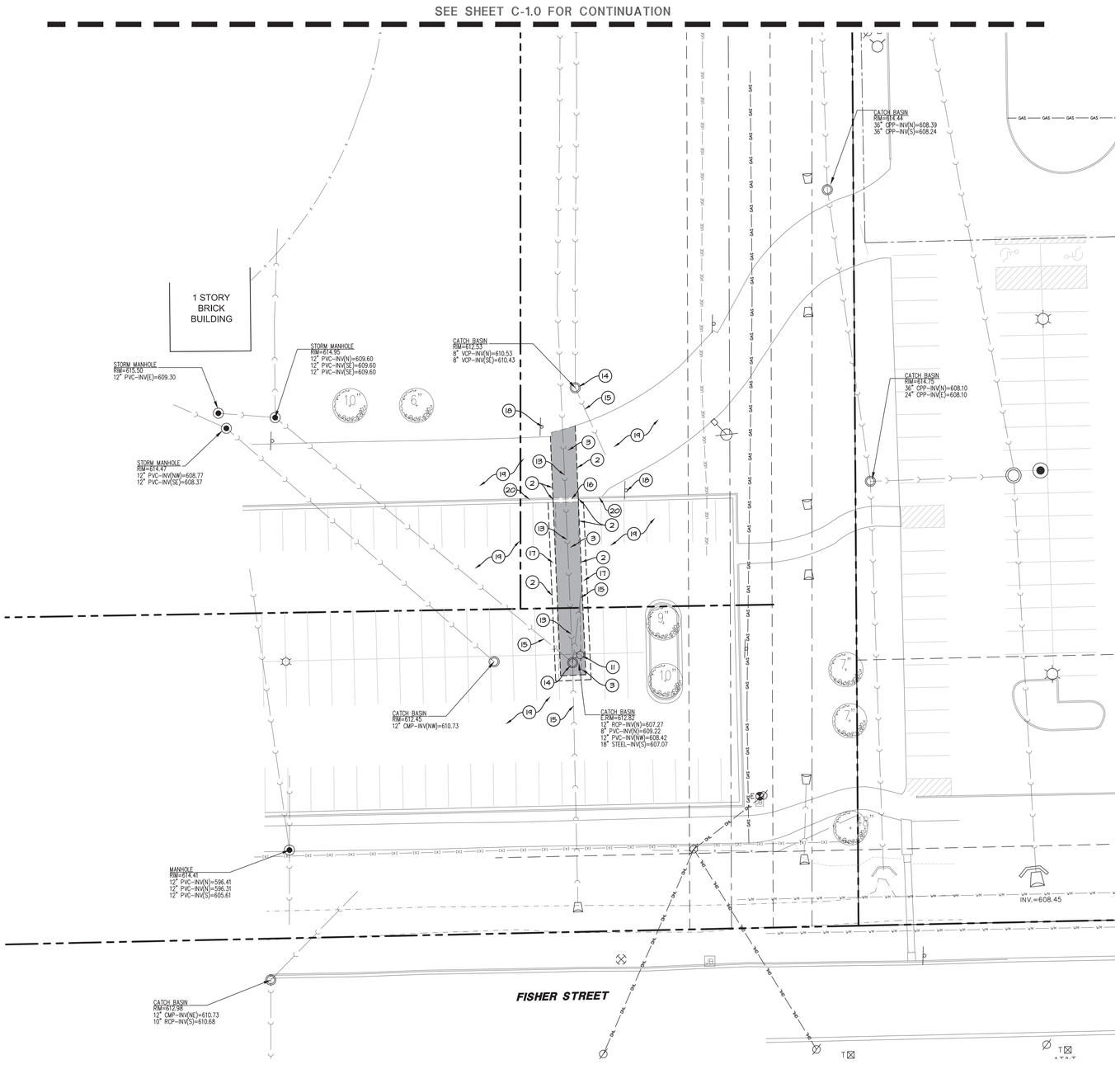

SITE DEMOLITION NOTES:

A. CONTRACTOR SHALL PERFORM ALL DEMOLITION WORK IN ACCORDANCE WITH ALL APPLICABLE FEDERAL, STATE, AND LOCAL REQUIREMENTS.
B. THE CONTRACTOR SHALL OBTAIN ALL NECESSARY DEMOLITION PERMITS AND COORDINATE ALL DEMOLITION WITH THE MUNICIPALITY AND OWNERS REPRESENTATIVE TO ENSURE PROTECTION AND MAINTENANCE OF SANITARY AND WATER UTILITIES AS NECESSARY AND TO PROVIDE STORM WATER CONVEYANCE UNTIL NEW FACILITIES ARE CONSTRUCTED, TESTED, AND PLACED IN OPERATION.
C. CONTRACTOR SHALL DEVELOP AND IMPLEMENT A DAILY PROGRAM OF DUST CONTROL PROCEDURES PRIOR TO DEMOLITION OF ANY STRUCTURES. MODIFICATION OF DUST CONTROL PROCEDURES SHALL BE PERFORMED BY THE CONTRACTOR TO THE SATISFACTION OF THE MUNICIPALITY AND COMPLY WITH THE NPDES II REQUIREMENTS OF THE ILLINOIS ENVIRONMENTAL PROTECTION AGENCY AND THE INDIVIDUAL STORM WATER POLLUTION PREVENTION PLAN FOR THIS PROJECT.
D. ALL EXISTING TREES, BRUSH AND MISCELLANEOUS VEGETATION TO BE REMOVED OR DEMOLISHED SHALL BE REMOVED FROM THE SITE AND LEGALLY DISPOSED OF BY THE CONTRACTOR.
E. VOIDS LEFT BY ANY ITEM REMOVED UNDER ANY PROPOSED BUILDING, PAVEMENT, OR WALK OR WITHIN 24" THEREOF SHALL BE BACKFILLED WITH ENGINEERED FILL ACCORDING TO THE GEOTECHNICAL REPORT.
F. ALL EXISTING BUILDINGS, FOUNDATIONS, CONCRETE OR ASPHALT PAVEMENT OR WALKS, CURB AND GUTTER AND MISCELLANEOUS STRUCTURES (INCLUDING, BUT NOT LIMITED TO FENCES, POLES, YARD LIGHTS, ELECTRICAL PANELS, AND MISCELLANEOUS DEBRIS) INDICATED TO BE DEMOLISHED SHALL BE REMOVED OR DEMOLISHED AND REMOVED FROM THE SITE AND DISPOSED OF LEGALLY BY THE CONTRACTOR.
G. CONTACT GAS COMPANY PRIOR TO DEMOLITION. LOCATION OF EXISTING GAS SERVICES ARE UNKNOWN.
H. ALL EXISTING TREES SHALL REMAIN UNLESS OTHERWISE NOTED.
I. ALL EXISTING UTILITIES SHALL REMAIN UNLESS OTHERWISE NOTED.
J. CONTRACTOR SHALL HIRE A PRIVATE UTILITY LOCATOR TO LOCATE UTILITIES PRIOR TO CONSTRUCTION AND SHALL CONTACT THE SITE ENGINEER IF A CONFLICT EXISTS.
K. CONTRACTOR SHALL PROVIDE REMOVAL AND REPLACEMENT AND SHORING AS NECESSARY TO MEET OSHA AND LOCAL CODE, AS WELL AS MANUFACTURER'S REQUIREMENTS.
L. ALL FOUNDATIONS FOR ALL FENCES, SIGNS, ETC. NOTED FOR REMOVAL SHALL BE REMOVED AND LEGALLY DISPOSED OF OFFSITE.
M. PROOF-ROLLING SHALL BE PERFORMED FOR ALL SUBGRADE PRIOR TO CONSTRUCTION OF NEW PAVEMENT. ALL SUBGRADE PROOF-ROLLING SHALL BE WITNESSED AND APPROVED BY A MATERIALS TESTING AGENCY TO BE HIRED BY THE OWNER. CONTRACTOR TO COORDINATE ALL PROOF-ROLLING WITH THE MATERIALS TESTING AGENCY. CONTACT THE ENGINEER AND MATERIAL TESTING AGENCY SO THAT THEY MAY WITNESS THE PROOF ROLL. PROOF ROLL SHALL BE PROVIDED FOR ALL PAVEMENT AREAS SPECIFIED FOR FULL DEPTH REMOVAL AND REPLACEMENT.
N. EXISTING CONDITIONS AND TOPOGRAPHY SHOWN REPRESENTS SITE CONDITIONS PER THE TOPOGRAPHICAL SURVEY LAST DATED 06-25-2025, PREPARED BY TORRENGA SURVEYING, LLC. CONTRACTOR SHALL FIELD VERIFY EXISTING ELEVATIONS AND CONDITIONS (INCLUDING BUT NOT LIMITED TO VERIFICATION OF CONTROL AND ALL UTILITIES WHETHER DEPICTED OR NOT) PRIOR TO CONSTRUCTION AND NOTIFY ENGINEER OF ANY DISCREPANCIES.
O. SEE SHEETS 3 OF 3 TOPOGRAPHICAL SURVEY FOR ALL EXISTING LOCATED UTILITY DATA.
P. CLEAR SITE AS NECESSARY TO CONSTRUCT PROPOSED IMPROVEMENTS.
Q. ALL ITEMS MARK "EXISTING OR EXISTING TO REMAIN" TO BE PROTECTED FROM DAMAGE FOR THE DURATION OF CONSTRUCTION.
R. EXISTING PAVEMENT AGGREGATE BASE COURSE SHALL NOT BE RE-USED AS AGGREGATE BASE COURSE FOR THE NEW PAVEMENT SECTION.

PROJECT NOTES:

1. EXISTING ASPHALT PATH TO REMAIN.
2. NEW FULL DEPTH SAWCUT TO PROVIDE CLEAN CONSTRUCTION BREAK.
3. EXISTING ASPHALT PAVEMENT TO BE REMOVED FULL DEPTH TO MEET THE BOTTOM OF THE NEW PAVEMENT CROSS SECTIONS (NEW SUBGRADE ELEVATION). SEE THE SITE GRADING PLAN FOR NEW FINISHED ELEVATIONS AND DETAIL SHEETS FOR NEW PAVEMENT CROSS SECTIONS.
4. EXISTING AREA LIGHT TO BE REMOVED.
5. EXISTING TREE TO BE REMOVED.
6. EXISTING GAZEBO TO BE REMOVED.
7. EXISTING CONCRETE PAVEMENT TO BE REMOVED FULL DEPTH TO MEET THE BOTTOM OF THE NEW PAVEMENT CROSS SECTIONS (NEW SUBGRADE ELEVATION). SEE THE SITE GRADING PLAN FOR NEW FINISHED ELEVATIONS AND DETAIL SHEETS FOR NEW PAVEMENT CROSS SECTIONS.
8. EXISTING ELECTRIC TRANSFORMER TO BE REMOVED.
9. EXISTING ELECTRIC PEDESTAL TO BE REMOVED.
10. EXISTING UNDERGROUND ELECTRIC LINE TO BE REMOVED.
11. EXISTING AREA LIGHT TO REMAIN.
12. EXISTING TREE TO REMAIN.
13. EXISTING STORM SEWER TO BE REMOVED.
14. EXISTING STORM STRUCTURE TO REMAIN.
15. EXISTING STORM SEWER TO REMAIN.
16. EXISTING CURB AND GUTTER TO BE REMOVED.
17. NEW 2' WIDE BUTT JOINT.
18. EXISTING SIGN TO REMAIN.
19. EXISTING ASPHALT PAVEMENT TO REMAIN.
20. EXISTING CURB AND GUTTER TO REMAIN

DEMOLITION LEGEND

- EXISTING STORM SEWER
- EXISTING SANITARY SEWER
- EXISTING WATER MAIN
- EXISTING GAS SERVICE
- EXISTING UNDERGROUND ELECTRIC SERVICE
- EXISTING UNDERGROUND TELCO SERVICE
- EXISTING OVERHEAD LINES
- EXISTING CATCH BASIN / INLET
- EXISTING BEEHIVE CATCH BASIN
- EXISTING MANHOLE
- EXISTING CONCRETE PAVEMENT TO BE REMOVED FULL DEPTH
- EXISTING ASPHALT PAVEMENT TO BE REMOVED FULL DEPTH

Indiana 811

CALL
48 HOURS BEFORE
YOU DIG

CONTRACTOR MUST LOCATE PRIVATE UTILITIES IN AREA OF CONSTRUCTION PRIOR TO PROCEEDING WITH WORK

NORTH

1" = 20'

00 10 20 40 80

JAMES GLASCOTT REGISTERED PE12400652 STATE OF INDIANA PROFESSIONAL ENGINEER

WT GROUP JOB NUMBER - C2400072

WT Group
Engineering • Design • Consulting

WT GROUP
Structural | Mechanical|Electrical|Plumbing
Civil | Land Survey | Telecommunication| Aquatic
Accessibility Consulting | Design & Program Management
Engineering with Precision, Pace & Passion.
2675 Prairie Avenue | Hoffman Estates, IL 60192
P: 224.293.6333 | F: 224.293.6444
wtengineering.com

©COPYRIGHT 2025 THE WT GROUP, LLC

DLA ARCHITECTS
www.dla-ltd.com
847.742.4063
60143 | Itasca | Suite 1300 | Two Pierce Place
form follows learning

SCHOOL TOWN OF MUNSTER
2025 NEW TENNIS FACILITY
MUNSTER HIGH SCHOOL
8823 COLUMBIA AVE. MUNSTER, IN 46321

SCHOOL TOWN OF MUNSTER

DATE:	DESCRIPTION:
9/15/25	TOWN SUBMITTAL

ISSUED FOR BID

PROJECT # 2024.073
DATE: AUGUST 12, 2025
SHEET TITLE: SITE DEMOLITION PLAN
SHEET: C-1.1

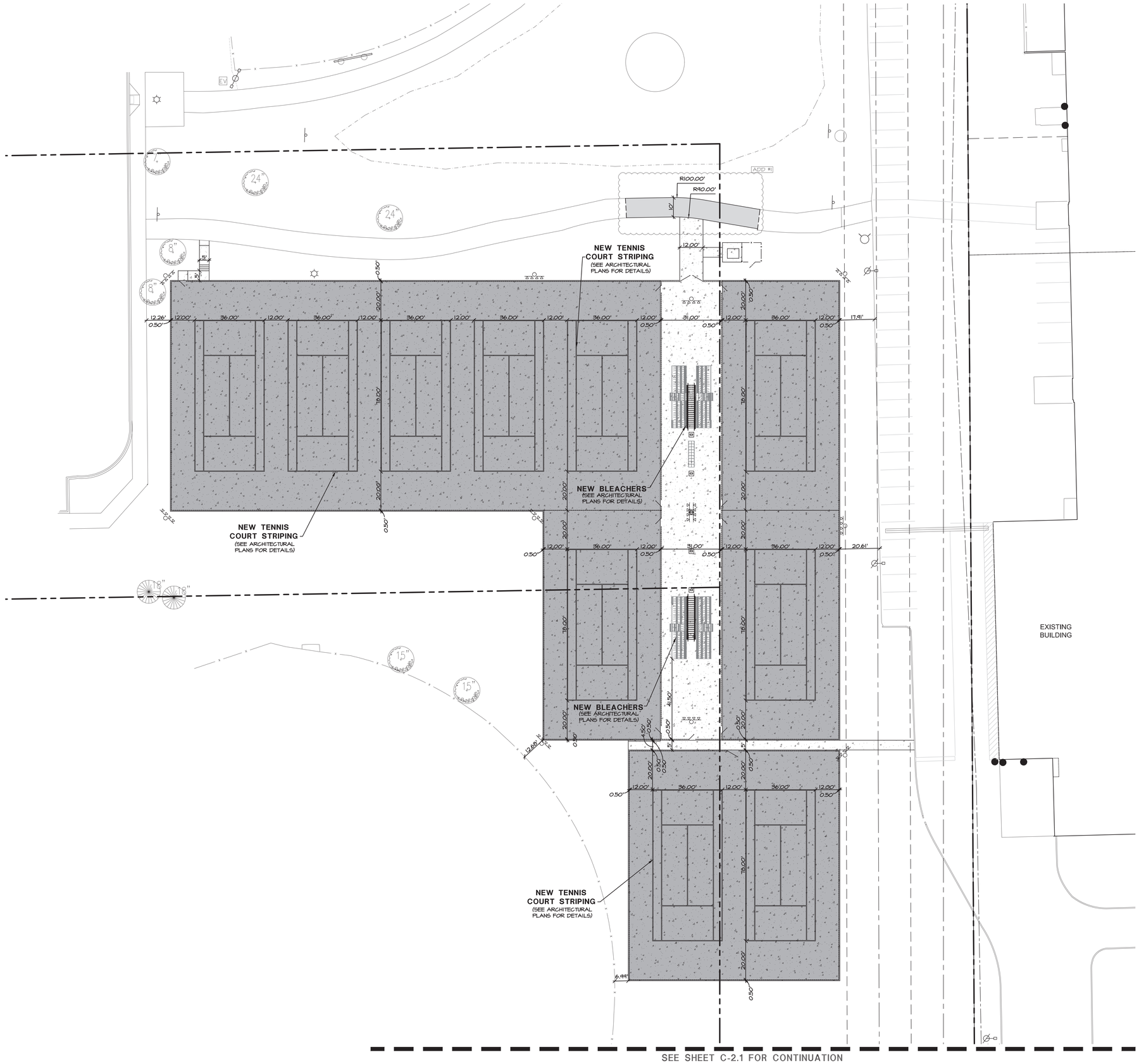

SITE GEOMETRIC NOTES:

A. EXISTING CONDITIONS AND TOPOGRAPHY SHOWN REPRESENTS SITE CONDITIONS PER THE TOPOGRAPHICAL SURVEY LAST DATED 06-25-2025, PREPARED BY TORRENGA SURVEYING, LLC. CONTRACTOR SHALL FIELD VERIFY EXISTING ELEVATIONS AND CONDITIONS (INCLUDING BUT NOT LIMITED TO VERIFICATION OF CONTROL AND ALL UTILITIES WHETHER DEPICTED OR NOT) PRIOR TO CONSTRUCTION AND NOTIFY ENGINEER OF ANY DISCREPANCIES.
B. ALL DIMENSIONS SHOWN ARE MEASURED FROM EDGE OF PAVEMENT TO EDGE OF PAVEMENT OR FACE OF CURB UNLESS OTHERWISE NOTED.
C. CONTRACTOR SHALL NOTIFY THE ENGINEER OF ANY DISCREPANCIES WITH THE ARCHITECTURAL PLANS.
D. CONSTRUCTION SURVEY AND STAKEOUT SHALL BE THE RESPONSIBILITY OF THE CONTRACTOR.
E. CONTRACTOR SHALL HIRE A PRIVATE UTILITY LOCATOR TO LOCATE UTILITIES PRIOR TO CONSTRUCTION AND SHALL CONTACT THE SITE ENGINEER IF A CONFLICT EXISTS.
F. CONTRACTOR SHALL CONTACT INDIANA811 (811 OR 1-800-382-5544) AND PRIVATE LOCATING SERVICE TO LOCATE ALL UNDERGROUND UTILITY LINES PRIOR TO STARTING ANY DEMOLITION AND/OR EXCAVATION. EXACT LOCATIONS OF ANY EXISTING ELECTRIC, GAS, TELEPHONE, ETC. LINES ARE UNKNOWN.

HATCH LEGEND

NEW 5" CONCRETE SIDEWALK
5" PORTLAND CEMENT CONCRETE
4" INDOT #53 AGGREGATE

POSTTENSIONED CONCRETE TENNIS COURTS
(SEE ARCHITECTURAL PLANS FOR DETAILS)

NEW FULL DEPTH ASPHALT PAVEMENT
1-3/4" - 9.5MM HMA SURFACE COURSE
2-3/4" - 25MM HMA BASE
6" INDOT #53 AGGREGATE

NORTH

1" = 20'

00 10 20 40 80

JAMES GLASCOTT REGISTERED PE12400652 STATE OF INDIANA PROFESSIONAL ENGINEER

WT GROUP JOB NUMBER - C2400072

WT Group
Engineering • Design • Consulting

WT GROUP
Structural | Mechanical|Electrical|Plumbing
Civil | Land Survey | Telecommunication| Aquatic
Accessibility Consulting | Design & Program Management
Engineering with Precision, Pace & Passion.
2675 Pratum Avenue | Hoffman Estates, IL 60192
P: 224.293.6333 | F: 224.293.6444
wtengineering.com

© COPYRIGHT 2025 THE W-T GROUP, LLC

DLA ARCHITECTS
form follows learning
Two Pierce Place | Suite 1300 | Itasca | 60143 | 847.742.4063 www.dla-ltd.com

SCHOOL TOWN OF MUNSTER
2025 NEW TENNIS FACILITY
MUNSTER HIGH SCHOOL
8823 COLUMBIA AVE. MUNSTER, IN 46321

SCHOOL TOWN OF MUNSTER

DATE:	DESCRIPTION:
9/15/25	TOWN SUBMITTAL

ISSUED FOR BID

PROJECT # 2024.073
DATE: AUGUST 12, 2025
SHEET TITLE: SITE GEOMETRIC PLAN
SHEET: C-2.0

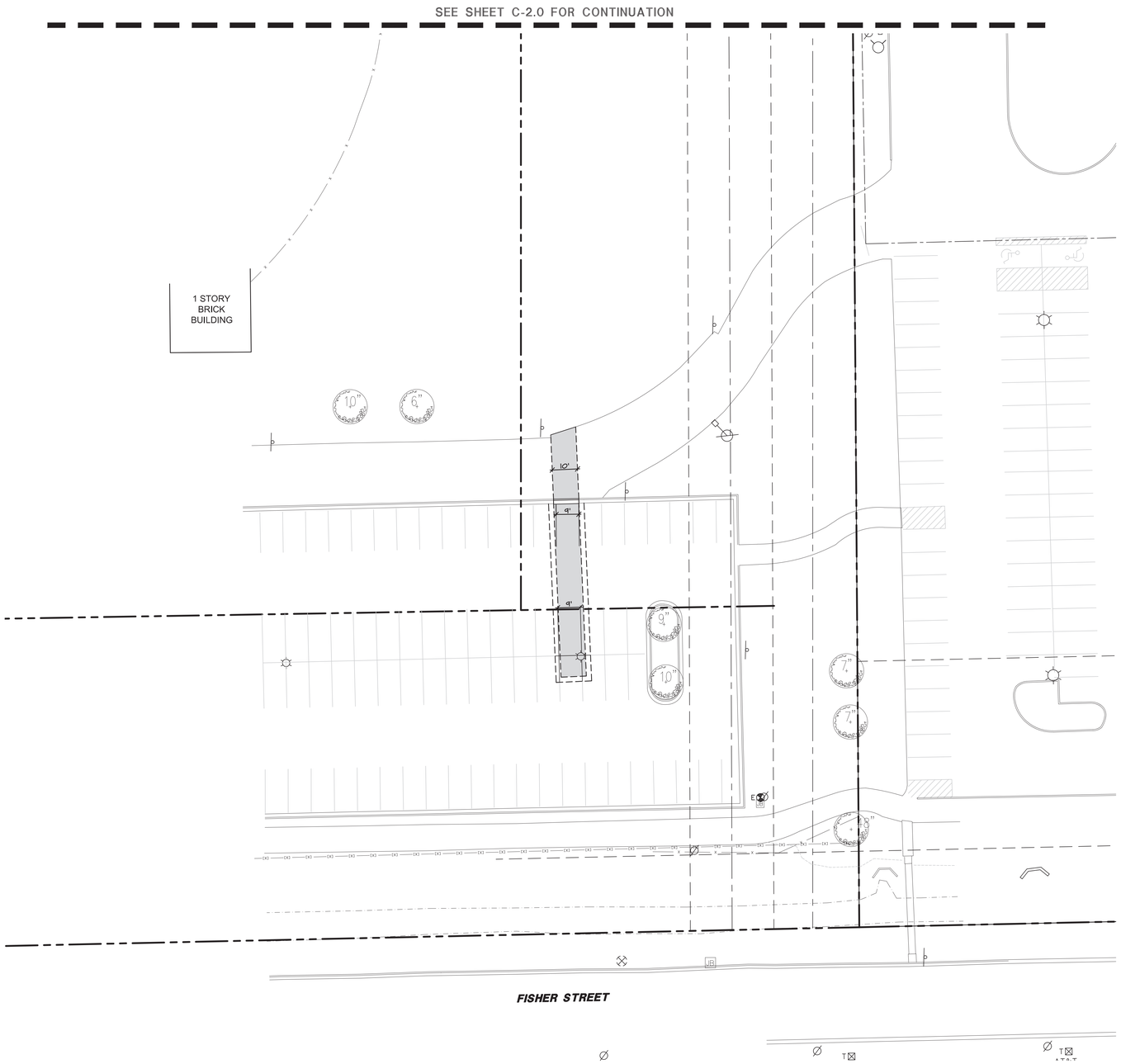

SITE GEOMETRIC NOTES:

A. EXISTING CONDITIONS AND TOPOGRAPHY SHOWN REPRESENTS SITE CONDITIONS PER THE TOPOGRAPHICAL SURVEY LAST DATED 06-25-2025, PREPARED BY TORRENGA SURVEYING, LLC. CONTRACTOR SHALL FIELD VERIFY EXISTING ELEVATIONS AND CONDITIONS (INCLUDING BUT NOT LIMITED TO VERIFICATION OF CONTROL AND ALL UTILITIES WHETHER DEPICTED OR NOT) PRIOR TO CONSTRUCTION AND NOTIFY ENGINEER OF ANY DISCREPANCIES.
B. ALL DIMENSIONS SHOWN ARE MEASURED FROM EDGE OF PAVEMENT TO EDGE OF PAVEMENT OR FACE OF CURB UNLESS OTHERWISE NOTED.
C. CONTRACTOR SHALL NOTIFY THE ENGINEER OF ANY DISCREPANCIES WITH THE ARCHITECTURAL PLANS.
D. CONSTRUCTION SURVEY AND STAKEOUT SHALL BE THE RESPONSIBILITY OF THE CONTRACTOR.
E. CONTRACTOR SHALL HIRE A PRIVATE UTILITY LOCATOR TO LOCATE UTILITIES PRIOR TO CONSTRUCTION AND SHALL CONTACT THE SITE ENGINEER IF A CONFLICT EXISTS.
F. CONTRACTOR SHALL CONTACT INDIANA811 (811 OR 1-800-382-5544) AND PRIVATE LOCATING SERVICE TO LOCATE ALL UNDERGROUND UTILITY LINES PRIOR TO STARTING ANY DEMOLITION AND/OR EXCAVATION. EXACT LOCATIONS OF ANY EXISTING ELECTRIC, GAS, TELEPHONE, ETC. LINES ARE UNKNOWN.

HATCH LEGEND

NEW 5" CONCRETE SIDEWALK
5" PORTLAND CEMENT CONCRETE
4" INDOT #53 AGGREGATE

POSTTENSIONED CONCRETE TENNIS COURTS
(SEE ARCHITECTURAL PLANS FOR DETAILS)

NEW FULL DEPTH ASPHALT PAVEMENT
1-3/4" - 9.5MM HMA SURFACE COURSE
2-3/4" - 25MM HMA BASE
6" INDOT #53 AGGREGATE

NORTH

1" = 20'

00 10 20 40 80

JAMES GLASCOTT
REGISTERED
PE12400652
STATE OF INDIANA
PROFESSIONAL ENGINEER

WT GROUP JOB NUMBER - C2400072

WT Group
Engineering • Design • Consulting

WT GROUP
Structural | Mechanical|Electrical|Plumbing
Civil| Land Survey | Telecommunication| Aquatic
Accessibility Consulting | Design & Program Management
Engineering with Precision, Pace & Passion.
2675 Prairie Avenue | Hoffman Estates, IL 60192
P: 224.293.5333 | F: 224.293.5444
wtengineering.com

© COPYRIGHT 2025 THE WT GROUP, LLC

DLA ARCHITECTS Ltd.
www.dla-ltd.com
847.742.4063
60143 | Itasca | Suite 1300 | Two Pierce Place
form follows learning℠

SCHOOL TOWN OF MUNSTER
2025 NEW TENNIS FACILITY
MUNSTER HIGH SCHOOL
8823 COLUMBIA AVE. MUNSTER, IN 46321

SCHOOL TOWN MUNSTER

DATE:	DESCRIPTION:
9/15/25	TOWN SUBMITTAL

ISSUED FOR BID

PROJECT # 2024.073
DATE: AUGUST 12, 2025
SHEET TITLE: SITE GEOMETRIC PLAN
SHEET: C-2.1

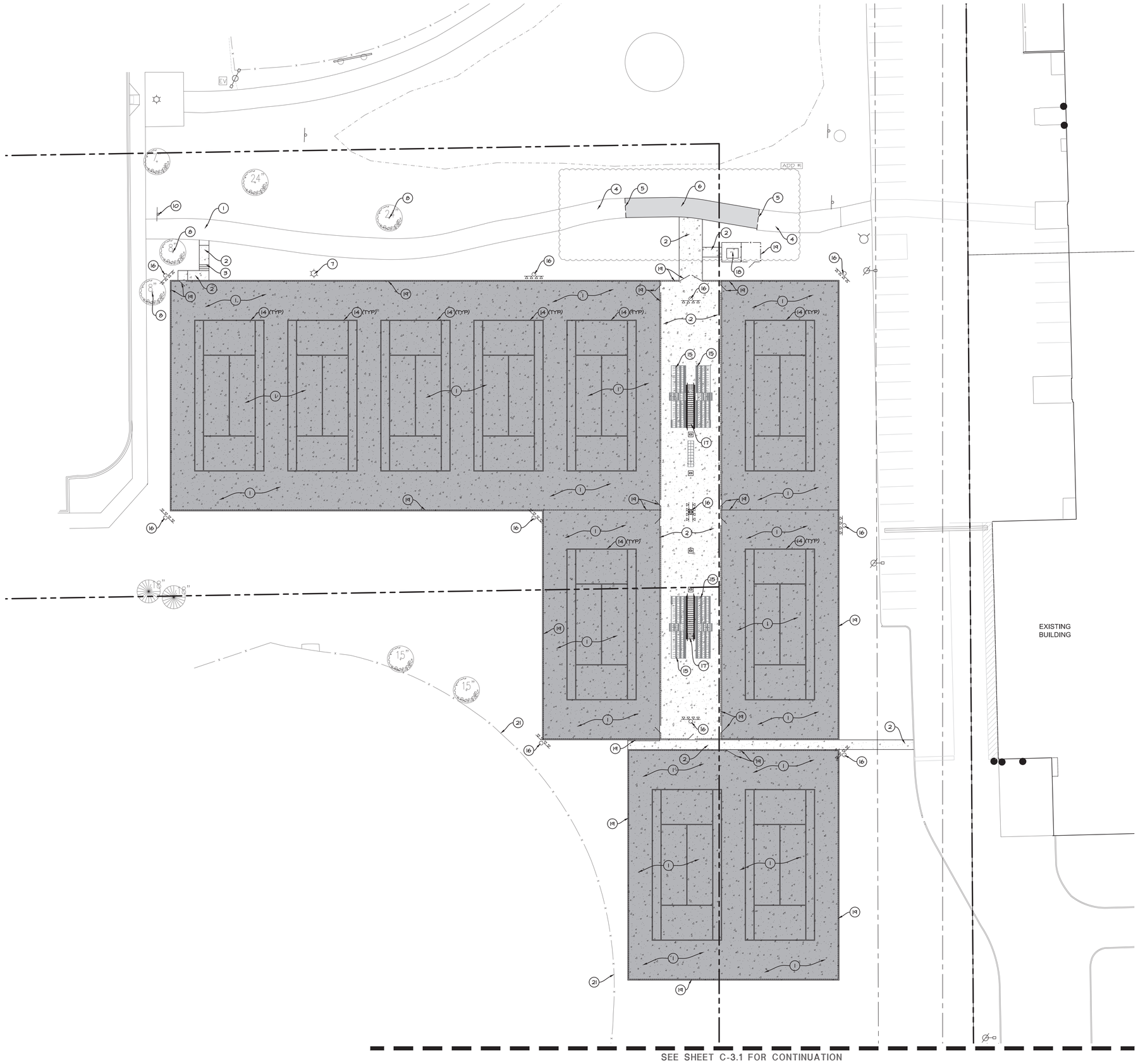

SITE DEVELOPMENT NOTES:

A. EXISTING CONDITIONS AND TOPOGRAPHY SHOWN REPRESENTS SITE CONDITIONS PER THE TOPOGRAPHICAL SURVEY LAST DATED 06-25-2025, PREPARED BY TORRENGA SURVEYING, LLC. CONTRACTOR SHALL FIELD VERIFY EXISTING ELEVATIONS AND CONDITIONS (INCLUDING BUT NOT LIMITED TO VERIFICATION OF CONTROL AND ALL UTILITIES WHETHER DEPICTED OR NOT) PRIOR TO CONSTRUCTION AND NOTIFY ENGINEER OF ANY DISCREPANCIES.
B. CONTRACTOR SHALL NOTIFY THE ENGINEER OF ANY DISCREPANCIES WITH THE ARCHITECTURAL PLANS.
C. CONTRACTOR SHALL COORDINATE ALL LANDSCAPING IMPROVEMENTS WITH LANDSCAPE PLANS.
D. CONSTRUCTION SURVEY AND STAKEOUT SHALL BE THE RESPONSIBILITY OF THE CONTRACTOR.
E. ALL EXISTING TREES SHOWN ARE TO REMAIN UNLESS OTHERWISE NOTED.
F. CONTRACTOR SHALL RESTORE ALL DISTURBED AREAS OUTSIDE OF CONSTRUCTION LIMITS TO ORIGINAL CONDITION OR BETTER.
G. ASPHALT PAVEMENT MARKINGS SHALL BE MADE WITH HIGH QUALITY PAINT CONFORMING TO INDOT STANDARD SPECIFICATIONS.
H. CONTRACTOR SHALL RESTORE ALL DISTURBED GREEN SPACES WITH 6" OF TOPSOIL, SEED, AND EROSION CONTROL BLANKET.
I. CONTRACTOR SHALL REPAIR AT HIS EXPENSE ANY DAMAGE TO EXISTING ASPHALT , CONCRETE, CURBS, SIDEWALKS, ETC. RESULTING FROM CONSTRUCTION TRAFFIC AND/OR OPERATIONS. REPAIRS SHALL BE MADE TO THE SATISFACTION OF THE OWNER AND/OR ENGINEER.
J. CONTRACTOR SHALL RE-STRIPE ALL STRIPING DISTURBED WITHIN THE EXISTING ROADWAYS/PARKING LOT TO MATCH EXISTING.
K. CONTRACTOR SHALL HIRE A PRIVATE UTILITY LOCATOR TO LOCATE UTILITIES PRIOR TO CONSTRUCTION AND SHALL CONTACT THE SITE ENGINEER IF A CONFLICT EXISTS.
L. ALL ITEMS MARKED "EXISTING" TO BE PROTECTED FROM DAMAGE FOR THE DURATION OF CONSTRUCTION.
M. ALL EXISTING SUBGRADE TO BE SCARIFIED (DISKED) TO A DEPTH OF 12" AND RE-COMPACTED, AND THEN TESTED USING A DYNAMIC CONE PENETROMETER. SEE GEOTECHNICAL REPORT FOR ADDITIONAL REQUIREMENTS.
N. EXISTING PAVEMENT AGGREGATE BASE COURSE SHALL NOT BE RE-USED AS AGGREGATE BASE COURSE FOR THE NEW PAVEMENT SECTION.

PROJECT NOTES:

1. NEW POSTTENSIONED CONCRETE TENNIS COURTS. (SEE ARCHITECTURAL PLANS FOR DETAILS).
2. NEW 5' CONCRETE SIDEWALK.
3. NEW CONCRETE STEPS.
4. EXISTING ASPHALT PATH TO REMAIN.
5. NEW FULL DEPTH SAWCUT TO PROVIDE CLEAN CONSTRUCTION BREAK.
6. NEW FULL DEPTH ASPHALT PAVEMENT.
7. EXISTING AREA LIGHT TO REMAIN.
8. EXISTING TREE TO REMAIN.
9. NEW 2' WIDE BUTT JOINT.
10. EXISTING SIGN TO REMAIN.
11. EXISTING ASPHALT PAVEMENT TO REMAIN.
12. EXISTING CURB AND GUTTER TO REMAIN
13. NEW B6.12 CONCRETE CURB AND GUTTER.
14. NEW TENNIS COURT STRIPING. (SEE ARCHITECTURAL PLANS FOR DETAILS).
15. NEW BLEACHERS. (SEE ARCHITECTURAL PLANS FOR DETAILS).
16. NEW STADIUM LIGHTING. (SEE PHOTOMETRIC PLANS FOR DETAILS).
17. NEW CONCRETE STAIRS. (SEE ARCHITECTURAL PLANS FOR DETAILS).
18. NEW PAD MOUNTED ELECTRIC TRANSFORMER. (SEE ELECTRICAL PLANS FOR DETAILS).
19. NEW FENCE AND GATE. (SEE ARCHITECTURAL PLANS FOR DETAILS).
20. NEW 6" BARRIER CURB.
21. EXISTING FENCE TO REMAIN.
22. RE-STRIPE TO MATCH EXISTING.

HATCH LEGEND

NEW 5" CONCRETE SIDEWALK
5" PORTLAND CEMENT CONCRETE
4" INDOT #53 AGGREGATE

POSTTENSIONED CONCRETE TENNIS COURTS
(SEE ARCHITECTURAL PLANS FOR DETAILS)

NEW FULL DEPTH ASPHALT PAVEMENT
1-3/4" - 9.5MM HMA SURFACE COURSE
2-3/4" - 25MM HMA BASE
6" INDOT #53 AGGREGATE

NORTH

1" = 20'

00 10 20 40 80

JAMES GLASCOTT REGISTERED PE12400652 STATE OF INDIANA PROFESSIONAL ENGINEER

WT GROUP JOB NUMBER - C2400072

WT Group
Engineering • Design • Consulting

WT GROUP
Structural | Mechanical/Electrical/Plumbing
Civil | Land Survey | Telecommunications| Aquatic
Accessibility Consulting | Design & Program Management
Engineering with Precision, Pace & Passion.
2675 Pratum Avenue | Hoffman Estates, IL 60192
P: 224.293.6333 | F : 224.293.6444
wtengineering.com

© COPYRIGHT 2025 THE W-T GROUP, LLC

DLA ARCHITECTS Ltd.
www.dla-ltd.com
form follows learning℠
Two Pierce Place | Suite 1300 | Itasca | 60143 | 847.742.4063

SCHOOL TOWN OF MUNSTER
2025 NEW TENNIS FACILITY
MUNSTER HIGH SCHOOL
8823 COLUMBIA AVE. MUNSTER, IN 46321

SCHOOL TOWN OF MUNSTER

DATE:	DESCRIPTION:
9/15/25	TOWN SUBMITTAL

ISSUED FOR BID

PROJECT # 2024.073
DATE: AUGUST 12, 2025
SHEET TITLE: SITE DEVELOPMENT PLAN
SHEET: C-3.0

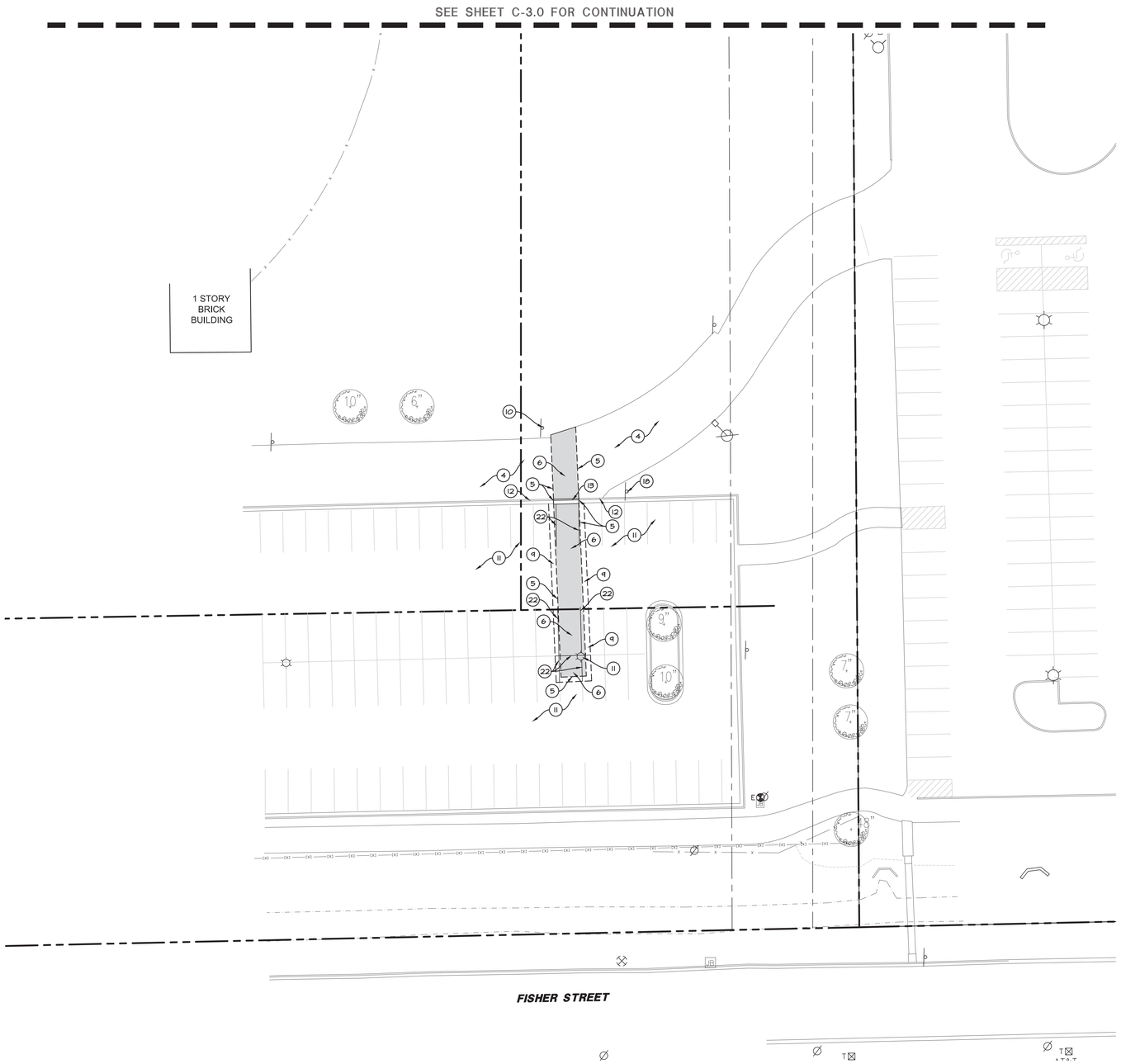

SITE DEVELOPMENT NOTES:

A. EXISTING CONDITIONS AND TOPOGRAPHY SHOWN REPRESENTS SITE CONDITIONS PER THE TOPOGRAPHICAL SURVEY LAST DATED 06-25-2025, PREPARED BY TORRENGA SURVEYING, LLC. CONTRACTOR SHALL FIELD VERIFY EXISTING ELEVATIONS AND CONDITIONS (INCLUDING BUT NOT LIMITED TO VERIFICATION OF CONTROL AND ALL UTILITIES WHETHER DEPICTED OR NOT) PRIOR TO CONSTRUCTION AND NOTIFY ENGINEER OF ANY DISCREPANCIES.
B. CONTRACTOR SHALL NOTIFY THE ENGINEER OF ANY DISCREPANCIES WITH THE ARCHITECTURAL PLANS.
C. CONTRACTOR SHALL COORDINATE ALL LANDSCAPING IMPROVEMENTS WITH LANDSCAPE PLANS.
D. CONSTRUCTION SURVEY AND STAKEOUT SHALL BE THE RESPONSIBILITY OF THE CONTRACTOR.
E. ALL EXISTING TREES SHOWN ARE TO REMAIN UNLESS OTHERWISE NOTED.
F. CONTRACTOR SHALL RESTORE ALL DISTURBED AREAS OUTSIDE OF CONSTRUCTION LIMITS TO ORIGINAL CONDITION OR BETTER.
G. ASPHALT PAVEMENT MARKINGS SHALL BE MADE WITH HIGH QUALITY PAINT CONFORMING TO INDOT STANDARD SPECIFICATIONS.
H. CONTRACTOR SHALL RESTORE ALL DISTURBED GREEN SPACES WITH 6" OF TOPSOIL, SEED, AND EROSION CONTROL BLANKET.
I. CONTRACTOR SHALL REPAIR AT HIS EXPENSE ANY DAMAGE TO EXISTING ASPHALT , CONCRETE, CURBS, SIDEWALKS, ETC. RESULTING FROM CONSTRUCTION TRAFFIC AND/OR OPERATIONS. REPAIRS SHALL BE MADE TO THE SATISFACTION OF THE OWNER AND/OR ENGINEER.
J. CONTRACTOR SHALL RE-STRIPE ALL STRIPING DISTURBED WITHIN THE EXISTING ROADWAYS/PARKING LOT TO MATCH EXISTING.
K. CONTRACTOR SHALL HIRE A PRIVATE UTILITY LOCATOR TO LOCATE UTILITIES PRIOR TO CONSTRUCTION AND SHALL CONTACT THE SITE ENGINEER IF A CONFLICT EXISTS.
L. ALL ITEMS MARKED "EXISTING" TO BE PROTECTED FROM DAMAGE FOR THE DURATION OF CONSTRUCTION.
M. ALL EXISTING SUBGRADE TO BE SCARIFIED (DISKED) TO A DEPTH OF 12" AND RE-COMPACTED, AND THEN TESTED USING A DYNAMIC CONE PENETROMETER. SEE GEOTECHNICAL REPORT FOR ADDITIONAL REQUIREMENTS.
N. EXISTING PAVEMENT AGGREGATE BASE COURSE SHALL NOT BE RE-USED AS AGGREGATE BASE COURSE FOR THE NEW PAVEMENT SECTION.

PROJECT NOTES:

1. NEW POSTTENSIONED CONCRETE TENNIS COURTS. (SEE ARCHITECTURAL PLANS FOR DETAILS).
2. NEW 5' CONCRETE SIDEWALK.
3. NEW CONCRETE STEPS.
4. EXISTING ASPHALT PATH TO REMAIN.
5. NEW FULL DEPTH SAWCUT TO PROVIDE CLEAN CONSTRUCTION BREAK.
6. NEW FULL DEPTH ASPHALT PAVEMENT.
7. EXISTING AREA LIGHT TO REMAIN.
8. EXISTING TREE TO REMAIN.
9. NEW 2' WIDE BUTT JOINT.
10. EXISTING SIGN TO REMAIN.
11. EXISTING ASPHALT PAVEMENT TO REMAIN.
12. EXISTING CURB AND GUTTER TO REMAIN
13. NEW B6.12 CONCRETE CURB AND GUTTER.
14. NEW TENNIS COURT STRIPING. (SEE ARCHITECTURAL PLANS FOR DETAILS).
15. NEW BLEACHERS. (SEE ARCHITECTURAL PLANS FOR DETAILS).
16. NEW STADIUM LIGHTING. (SEE PHOTOMETRIC PLANS FOR DETAILS).
17. NEW CONCRETE STAIRS. (SEE ARCHITECTURAL PLANS FOR DETAILS).
18. NEW PAD MOUNTED ELECTRIC TRANSFORMER. (SEE ELECTRICAL PLANS FOR DETAILS).
19. NEW FENCE AND GATE. (SEE ARCHITECTURAL PLANS FOR DETAILS).
20. NEW 6" BARRIER CURB.
21. EXISTING FENCE TO REMAIN.
22. RE-STRIPE TO MATCH EXISTING.

HATCH LEGEND

NEW 5" CONCRETE SIDEWALK
5" PORTLAND CEMENT CONCRETE
4" INDOT #53 AGGREGATE

POSTTENSIONED CONCRETE TENNIS COURTS
(SEE ARCHITECTURAL PLANS FOR DETAILS)

NEW FULL DEPTH ASPHALT PAVEMENT
1-3/4" - 4.5MM HMA SURFACE COURSE
2-3/4" - 25MM HMA BASE
6" INDOT #53 AGGREGATE

NORTH

1" = 20'

00 10 20 40 80

JAMES GLASCOTT REGISTERED PE12400662 STATE OF INDIANA PROFESSIONAL ENGINEER

WT GROUP JOB NUMBER - C2400072

WT Group
Engineering • Design • Consulting

WT GROUP
Structural | Mechanical|Electrical|Plumbing
Civil| Land Survey | Telecommunication| Aquatic
Accessibility Consulting | Design & Program Management
Engineering with Precision, Pace & Passion.
2675 Prairie Avenue | Hoffman Estates, IL 60192
P: 224.293.5333 | F: 224.293.6444
wtengineering.com

© COPYRIGHT 2025 THE WT GROUP, LLC

DLA ARCHITECTS Ltd.
www.dla-ltd.com
847.742.4063
60143 | Itasca | Suite 1300 | Two Pierce Place
form follows learning℠

SCHOOL TOWN OF MUNSTER
2025 NEW TENNIS FACILITY
MUNSTER HIGH SCHOOL
8823 COLUMBIA AVE. MUNSTER, IN 46321

SCHOOL TOWN MUNSTER

DATE:	DESCRIPTION:
9/15/25	TOWN SUBMITTAL

ISSUED FOR BID

PROJECT # 2024.073
DATE: AUGUST 12, 2025
SHEET TITLE: SITE DEVELOPMENT PLAN
SHEET: C-3.1

INDEX	
SHEET NO.	SUBJECT
1	Curb Ramp Drawing Index and General Notes
2-3	Perpendicular Curb Ramp Typical Placement
4	Perpendicular Curb Ramp Component Details
5	One-Way-Directional Perpendicular Curb Ramp Typical Placement
6	One-Way-Directional Perpendicular Curb Ramp Component Details
7	Parallel Curb Ramps Typical Placement
8	Parallel Curb Ramp Component Details
9	Blended Transition Curb Ramp, Depressed Curb Ramp and Diagonal Curb Ramp Typical Placement
10	Blended Transition Curb Ramp Component Details
11	Median Cut-Through and Median Perpendicular Curb Ramp Typical Placement
12-13	Detectable Warning Surface Placement and Configuration
14	Detectable Warning Surface Details

GENERAL NOTES:

1. All slopes are absolute rather than relative to the sidewalk or roadway grade. Slopes at least 0.50% less than the maximum are preferred.
2. Ramp or Blended Transition. A ramp or blended transition shall be used to lower or raise the sidewalk to connect with the street or highway.
3. Turning Space. A turning space shall be provided at the top of a perpendicular ramp, bottom of a parallel ramp, or where the pedestrian travel requires a change in direction. A common turning space may be shared by adjacent ramps. The turning space shall have a minimum clear dimension of 4 ft x 4 ft. Where the turning space is constrained at the back of the sidewalk by a curb, retaining wall, building, or feature over 2 inches in height, the minimum clear dimension shall be 4 ft x 5 ft, with the 5-ft dimension in the direction of the ramp running slope.
4. Flared Side. A flared side shall be used adjacent to a walkable surface. A flared side may be used adjacent to a non-walkable surface. A flared side shall have a maximum slope of 10.00% measured parallel to the back of the curb.
5. Return Curb. A return curb is placed perpendicular to the roadway curb. A return curb may be used adjacent to a non-walkable surface. A return curb shall not be used adjacent to a walkable surface. The return curb may be omitted where the non-walkable surface is flared and the curb adjacent the roadway is tapered to meet the flush curb at the bottom of the ramp.
6. Clear Space. A clear space shall be provided beyond the bottom grade break of a curb ramp wholly contained within the crosswalk and wholly outside the parallel vehicular travel path. The clear space shall have a minimum clear dimension of 4 ft x 4 ft.
7. Detectable Warning Surface. A detectable warning surface shall consist of truncated domes and be placed at each street, highway, or railroad crossing. The detectable warning surface shall extend a minimum of 2 ft in the direction of pedestrian travel and be placed the entire width of a ramp, blended transition, or turning space.
8. Running Slope. The running slope of a ramp, blended transition, or turning space shall be measured parallel to the direction of pedestrian travel.
   a. A running slope of 2.00% or less is considered level.
   b. A ramp shall have a maximum running slope of 8.33% but shall not require a ramp length to exceed 15 ft.
   c. A blended transition shall have a maximum running slope of 5.00%.
   d. A turning space shall have a maximum running slope of 2.00%.
9. Width. Unless otherwise noted, minimum width of a ramp, blended transition, or turning space, excluding flared sides or return curb, shall be 4 ft.
10. Grade Break. A grade break at the top and bottom of a ramp, blended transition, or turning space shall be perpendicular to the running slope. Grade breaks shall not be within the ramp, blended transition, turning space, or detectable warning surface. Grade breaks shall be flush. Vertical discontinuities shall not be greater than 1/2 in. Where a discontinuity is greater than 1/4 in. the surface shall be beveled with a slope not steeper than 1V:2H.
11. Cross Slope Exceptions. The cross slope of a ramp, blended transition, or turning space shall be measured perpendicular to the direction of pedestrian travel.
    a. The maximum cross slope at a pedestrian street crossing without yield or stop control shall be 5.00%.
    b. The maximum cross slope at a pedestrian street crossing with yield or stop control shall be 2.00%.
    c. The maximum cross slope at a midblock crossing shall be the established grade of the adjacent roadway.
12. Counter Slope. A counter slope is the cross slope of the gutter or street adjacent the running slope of the ramp, blended transition, or turning space. See Standard Drawing E 604-SWCR-14 for counter slope details.
13. Objects such as a utility cover, vault frame, and grating shall be placed outside the curb ramp.
14. Curb ramps shall be placed within the marked crosswalk area.
15. Drainage inlets should be located uphill from a curb ramp to prevent pording in the path of pedestrian travel.

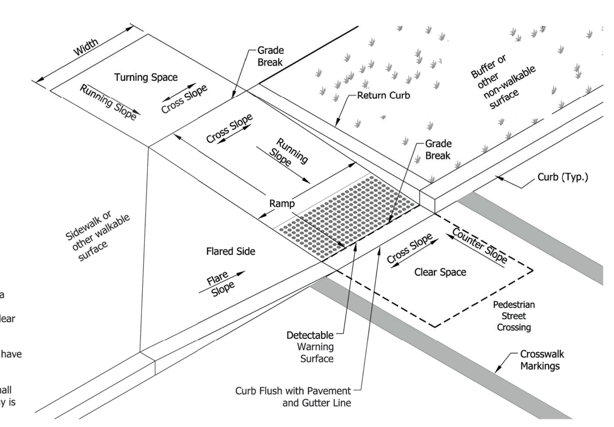

TYPICAL CURB RAMP COMPONENTS

INDIANA DEPARTMENT OF TRANSPORTATION

CURB RAMP DRAWING INDEX AND GENERAL NOTES

SEPTEMBER 2018

STANDARD DRAWING NO. E 604-SWCR-01

ELIZABETH W. PHILLIPS REGISTERED No. 10200124 STATE OF INDIANA PROFESSIONAL ENGINEER

/s/ Elizabeth W. Phillips 03/20/18
DESIGN STANDARDS ENGINEER DATE

/s/ John Leckie 04/25/18
CHIEF ENGINEER DATE

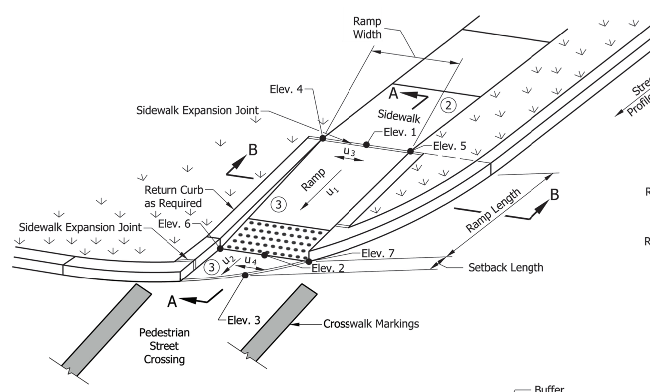

Component Slope Equations:

Ramp u_1 = (Elev. 1 - Elev. 2) / Ramp Length ≤ 8.33% — Running Slope

Setback u_2 = (Elev. 2 - Elev. 3) / Setback Length ≤ Profile Grade of Adjacent Street — Running Slope

Ramp u_3 = (Elev. 4 - Elev. 5) / Ramp Width ≤ 2.00% (4) — Cross Slope

Setback u_4 = (Elev. 6 - Elev. 7) / Ramp Width ≤ 2.00% (4) — Cross Slope

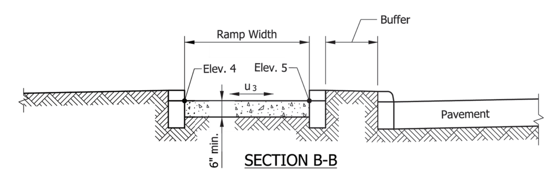

SECTION B-B

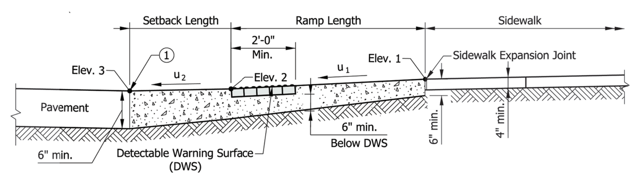

SECTION A-A

NOTES:

1. The bottom edge of the ramp or setback and top of curb shall be flush with the edge of adjacent pavement and gutter line.
2. A turning space is not required at the top of the ramp for a one-way directional perpendicular curb ramp.
3. Curb ramp surface shall be coarse broomed transverse to the running slope.
4. See Standard Drawing E 604-SWCR-01 for cross slope exceptions.
5. See Standard Drawing E 604-SWCR-12, -13, and -14 for Detectable Warning Surface placement, configuration, and details.
6. See Standard Drawing E 604-CCSJ-01 for sidewalk expansion joint details.

LEGEND:

- Buffer or Other Non-Walkable Surface
- Ramp
- Detectable Warning Surface

INDIANA DEPARTMENT OF TRANSPORTATION

ONE-WAY DIRECTIONAL PERPENDICULAR CURB RAMP COMPONENT DETAILS

SEPTEMBER 2018

STANDARD DRAWING NO. E 604-SWCR-06

ELIZABETH W. PHILLIPS REGISTERED No. 10200124 STATE OF INDIANA PROFESSIONAL ENGINEER

/s/ Elizabeth W. Phillips 03/29/18
DESIGN STANDARDS ENGINEER DATE

/s/ John Leckie 04/25/18
CHIEF ENGINEER DATE

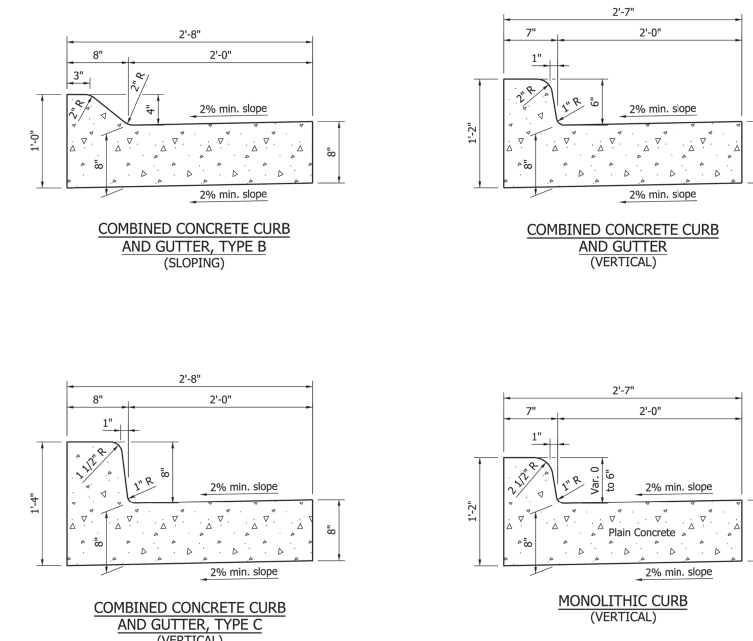

COMBINED CONCRETE CURB AND GUTTER, TYPE B (SLOPING)

COMBINED CONCRETE CURB AND GUTTER (VERTICAL)

COMBINED CONCRETE CURB AND GUTTER, TYPE C (VERTICAL)

MONOLITHIC CURB (VERTICAL)

INDIANA DEPARTMENT OF TRANSPORTATION

COMBINED CONCRETE CURB AND GUTTER

SEPTEMBER 2011

STANDARD DRAWING NO. E 605-CCCG-01

RICHARD L. VANCLEAVE REGISTERED No. 9750 STATE OF INDIANA PROFESSIONAL ENGINEER

/s/ Richard L. VanCleave 09/01/11
DESIGN STANDARDS ENGINEER DATE

/s/ Mark A. Miller 09/01/11
CHIEF HIGHWAY ENGINEER DATE

DESIGN STANDARDS ENGINEER

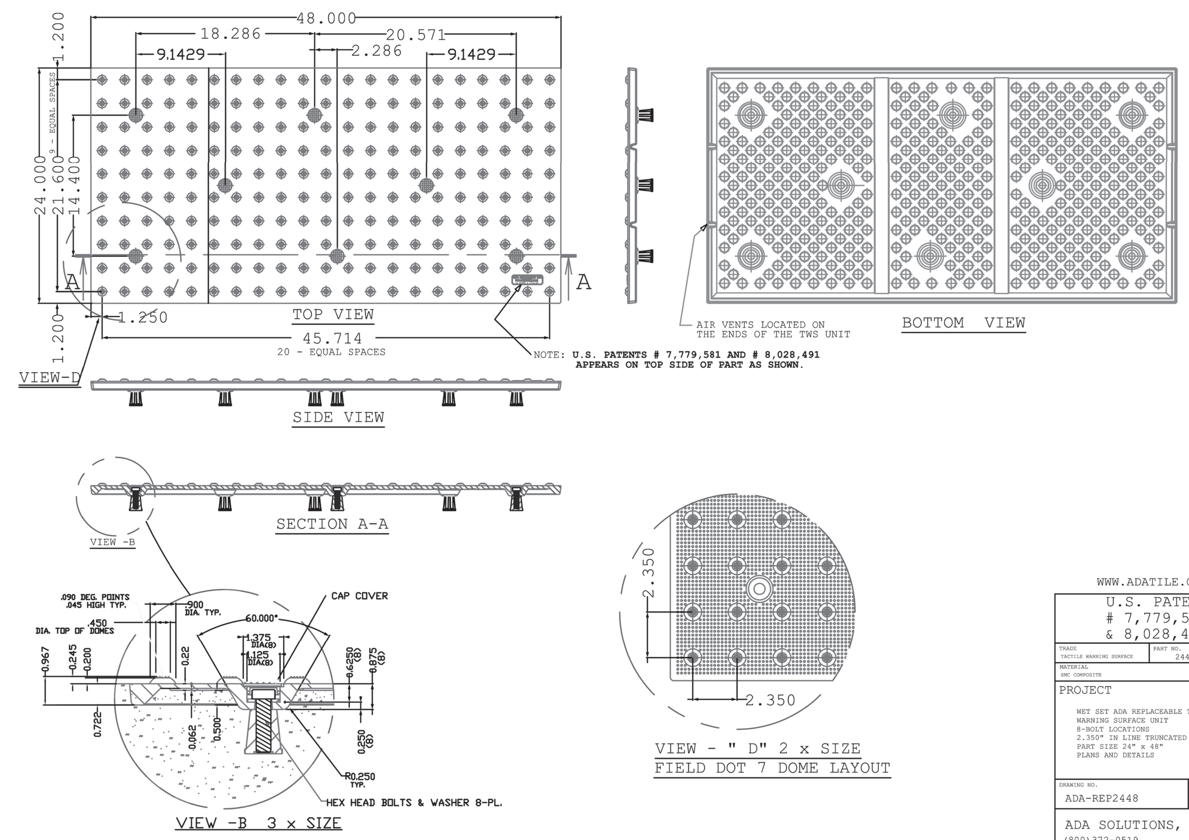

WWW.ADATILE.COM

U.S. PATENT # 7,779,581 & 8,028,491

TRADE: TACTILE WARNING SURFACE — PART NO. 2448NV8REP

MATERIAL: SMC COMPOSITE

PROJECT: WET SET ADA REPLACEABLE TACTILE WARNING SURFACE UNIT 8-BOLT LOCATIONS 2.350" IN LINE TRUNCATED DOME PATTERN PART SIZE 24" x 48" PLANS AND DETAILS

DRAWING NO. ADA-REP2448 — DATE 10-05-11

ADA SOLUTIONS, INC.
(800)372-0519
P.O. Box 3
N.Billerica, Ma. 01862

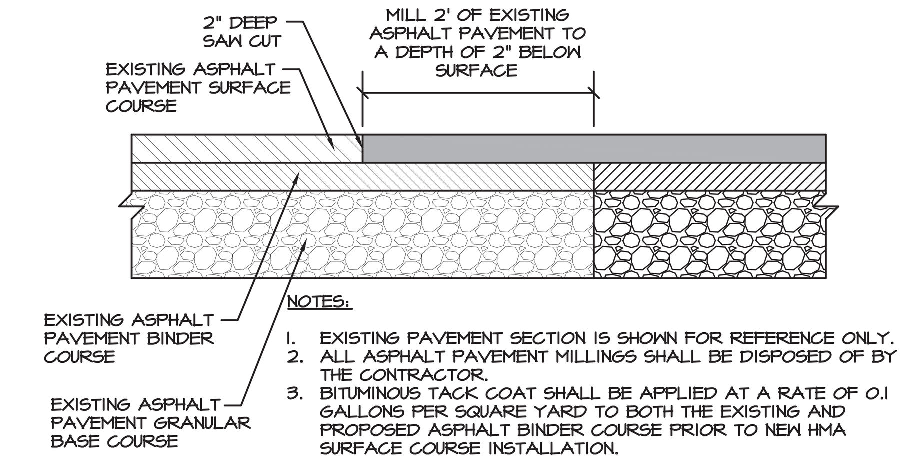

NOTES:

1. EXISTING PAVEMENT SECTION IS SHOWN FOR REFERENCE ONLY.
2. ALL ASPHALT PAVEMENT MILLINGS SHALL BE DISPOSED OF BY THE CONTRACTOR.
3. BITUMINOUS TACK COAT SHALL BE APPLIED AT A RATE OF 0.1 GALLONS PER SQUARE YARD TO BOTH THE EXISTING AND PROPOSED ASPHALT BINDER COURSE PRIOR TO NEW HMA SURFACE COURSE INSTALLATION.

DETAIL - BUTT JOINT

NOT TO SCALE

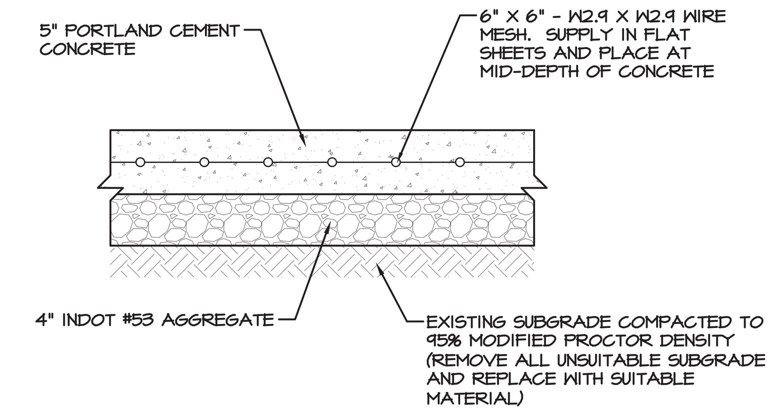

NOTES:

1. INSTALL THREE (3) CONTINUOUS NO. 4 STEEL REBAR PERPENDICULAR TO AND CENTERED OVER ALL UTILITY TRENCH CROSSINGS SO BARS EXTEND A MINIMUM OF FIVE (5) FEET BEYOND THE TRENCH.

DETAIL - 5" CONCRETE SIDEWALK PAVEMENT

NOT TO SCALE

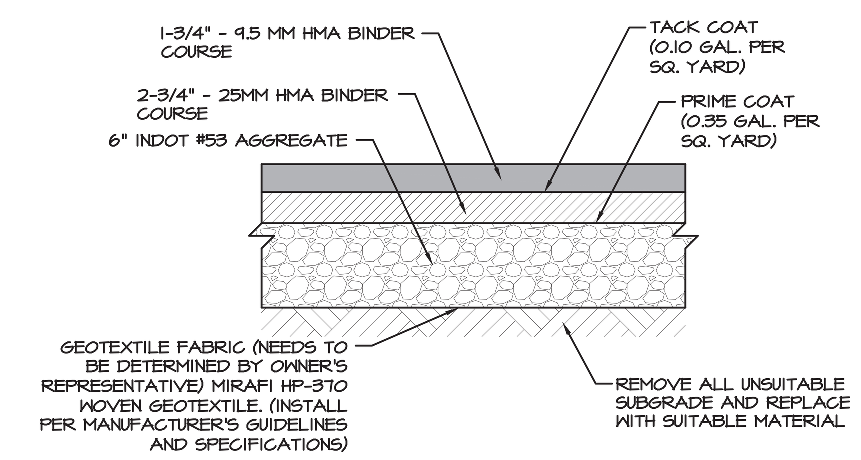

DETAIL - ASPHALT PAVEMENT

NOT TO SCALE

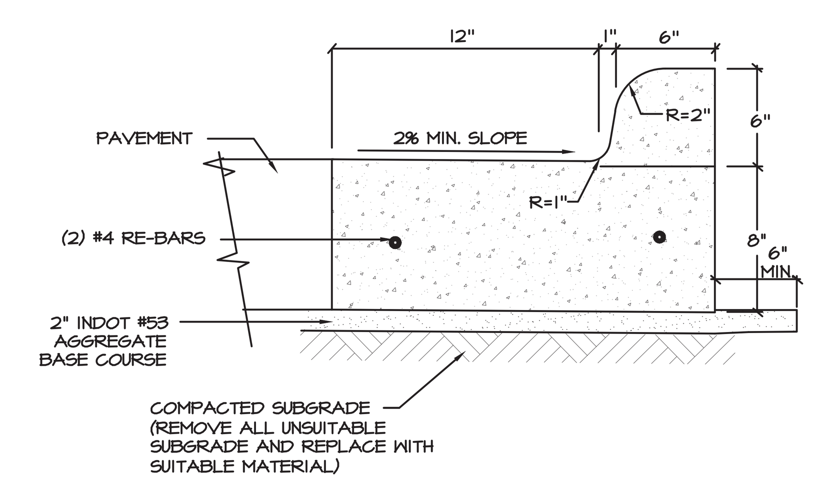

DETAIL-B6-12 CURB & GUTTER

NOT TO SCALE

DLA Ltd. ARCHITECTS — www.dla-ltd.com

form follows learning[SM]

Two Pierce Place | Suite 1300 | Itasca | 60143 | 847.742.4063

SCHOOL TOWN OF MUNSTER
2025 NEW TENNIS FACILITY
MUNSTER HIGH SCHOOL
8823 COLUMBIA AVE. MUNSTER, IN 46321

DATE:	DESCRIPTION:
9/15/25	TOWN SUBMITTAL

ISSUED FOR BID

PROJECT # 2024.073

DATE: AUGUST 12, 2025

SHEET TITLE: SITE DEVELOPMENT DETAILS

JAMES GLASCOTT REGISTERED PE12400652 STATE OF INDIANA PROFESSIONAL ENGINEER

WT GROUP JOB NUMBER - C2400072

WT Group — Engineering • Design • Consulting

WT GROUP
Structural | Mechanical/Electrical/Plumbing
Civil | Land Survey | Telecommunication| Aquatic
Accessibility Consulting | Design & Program Management
Engineering with Precision, Pace & Passion.

2675 Pratum Avenue | Hoffman Estates, IL 60192
P: 224.293.6333 | F: 224.293.6444
wtengineering.com

©COPYRIGHT 2025 THE W-T GROUP, LLC

SHEET: C-3.2

SITE GRADING NOTES:

A. EXISTING CONDITIONS AND TOPOGRAPHY SHOWN REPRESENTS SITE CONDITIONS PER THE TOPOGRAPHICAL SURVEY LAST DATED 06-25-2025, PREPARED BY TORRENSA SURVEYING, LLC. CONTRACTOR SHALL FIELD VERIFY EXISTING ELEVATIONS AND CONDITIONS (INCLUDING BUT NOT LIMITED TO VERIFICATION OF CONTROL AND ALL UTILITIES WHETHER DEPICTED OR NOT) PRIOR TO CONSTRUCTION AND NOTIFY ENGINEER OF ANY DISCREPANCIES.
B. ALL PROPOSED GRADES ARE GIVEN TO FINISHED GRADE, I.E. TOP OF PROPOSED ASPHALT, CONCRETE, TOP OF PROPOSED CURB, ETC. SEE DETAILS FOR PAVEMENT THICKNESS.
C. CONTRACTOR SHALL CONTACT INDIANA 811, A PRIVATE LOCATING SERVICE TO LOCATE ALL UNDERGROUND UTILITY LINES PRIOR TO STARTING ANY DEMOLITION AND/OR EXCAVATION. EXACT LOCATIONS OF ANY EXISTING ELECTRIC, GAS, TELEPHONE, ETC. LINES ARE UNKNOWN.
D. CONTRACTOR SHALL ENSURE POSITIVE SITE DRAINAGE AT THE END OF EACH WORKING DAY DURING CONSTRUCTION OPERATIONS. FAILURE TO PROVIDE ADEQUATE DRAINAGE WILL PRECLUDE THE CONTRACTOR FROM ANY POSSIBLE COMPENSATION REQUESTED DUE TO DELAYS OR UNSUITABLE MATERIALS CREATED AS A RESULT.
E. CONTRACTOR SHALL RESTORE ALL DISTURBED AREAS OUTSIDE OF CONSTRUCTION LIMITS TO ORIGINAL CONDITION OR BETTER.
F. CONTRACTOR SHALL REPAIR AT HIS EXPENSE ANY DAMAGE TO EXISTING ASPHALT, CONCRETE, CURBS, SIDEWALKS, ETC. RESULTING FROM CONSTRUCTION TRAFFIC AND/OR OPERATIONS. REPAIRS SHALL BE MADE TO THE SATISFACTION OF THE OWNER AND/OR ENGINEER.
G. CONTRACTOR TO UTILIZE CARE WHEN WORKING NEAR EXISTING UTILITIES TO REMAIN. ANY DAMAGE TO EXISTING UTILITIES NOT NOTED TO BE REMOVED SHALL BE REPAIRED AT CONTRACTOR'S EXPENSE TO THE SATISFACTION OF THE OWNER AND/OR ENGINEER.
H. ALL EXISTING TREES SHOWN ARE TO REMAIN UNLESS OTHERWISE NOTED.
I. ALL HANDICAP ACCESSIBLE ROUTES (SIDEWALKS, WALKWAYS, PAVEMENTS, ETC.) SHALL MAINTAIN A MAXIMUM CROSS SLOPE OF 2.00% AND A MAXIMUM LONGITUDINAL SLOPE OF 5.00%. ACCESSIBLE PARKING STALLS SHALL MAINTAIN A MAXIMUM SLOPE OF 2.00% IN ALL DIRECTIONS.
J. VOIDS LEFT BY ANY ITEM REMOVED UNDER ANY PROPOSED BUILDING, PAVEMENT, OR WALK OR WITHIN 24" THEREOF SHALL BE BACKFILLED WITH ENGINEERED FILL ACCORDING TO THE GEOTECHNICAL REPORT.
K. ALL FIRE ACCESS LANES WITHIN THE PROJECT AREA SHALL REMAIN IN SERVICE, CLEAN OF DEBRIS, AND ACCESSIBLE FOR USE BY EMERGENCY VEHICLES.
L. CONSTRUCTION ACCESS POINTS TO THE SITE SHALL BE PROTECTED IN SUCH A WAY AS TO PREVENT TRACKING OF MUD OR SOIL ONTO PUBLIC THOROUGHFARES. ALL SEDIMENT SPILLED, DROPPED, WASHED OR TRACKED ONTO PUBLIC RIGHTS-OF-WAY MUST BE REMOVED IMMEDIATELY BY THE CONTRACTOR.
M. ALL EXISTING SUBGRADE TO BE SCARIFIED (DISKED) TO A DEPTH OF 12" AND RE-COMPACTED, AND THEN TESTED USING A DYNAMIC CONE PENETROMETER. SEE GEOTECHNICAL REPORT FOR ADDITIONAL REQUIREMENTS.
N. ALL EXCESS SOILS THAT CANNOT BE USED AS SUITABLE FILL SHALL BE HAULED FROM THE SITE AND LEGALLY DISPOSED OF.
O. PREPARE SUBGRADE AS SPECIFIED WITHIN THE GEOTECHNICAL ENGINEERING REPORT DATED 11-8-2024 PREPARED BY GEOCON PROFESSIONAL SERVICES, LLC.
P. ALL TOPSOIL BENEATH PROPOSED STRUCTURES AND PAVEMENT SHALL BE REMOVED. REFER TO THE GEOTECHNICAL ENGINEERING REPORT DATED 11-8-2024 PREPARED BY GEOCON PROFESSIONAL SERVICES, LLC FOR EXISTING TOPSOIL DEPTHS.
Q. EXISTING PAVEMENT AGGREGATE BASE COURSE SHALL NOT BE RE-USED AS AGGREGATE BASE COURSE FOR THE NEW PAVEMENT SECTION.

GRADING LEGEND

627.77	EXISTING SPOT GRADE
000.00	PROPOSED SPOT GRADE
*000.00	INTERPOLATED SPOT GRADE
000.00	PROPOSED RIM ELEVATION
000	EXISTING CONTOUR LINE
000	PROPOSED CONTOUR LINE
	OVERLAND FLOW ARROW
	100 YEAR OVERLAND FLOW ROUTE
TP	TOP OF PAVEMENT ELEVATION
TW	TOP OF SIDEWALK ELEVATION
FF	FINISHED FLOOR ELEVATION
TC	TOP OF CURB ELEVATION
FL	FLOW LINE ELEVATION
ADJUST	ADJUST EXISTING RIM ELEVATION
	EXISTING CATCH BASIN / INLET
	EXISTING BEEHIVE CATCH BASIN
	EXISTING MANHOLE
	PROPOSED NYLOPLAST DRAIN BASIN
	PROPOSED INLET
	PROPOSED SQUARE NDS CATCH BASIN

HATCH LEGEND

NEW 5" CONCRETE SIDEWALK
5" PORTLAND CEMENT CONCRETE
4" INDOT #53 AGGREGATE

POSTTENSIONED CONCRETE TENNIS COURTS
(SEE ARCHITECTURAL PLANS FOR DETAILS)

NEW FULL DEPTH ASPHALT PAVEMENT
1-3/4" - 9.5MM HMA SURFACE COURSE
2-3/4" - 25MM HMA BASE
6" INDOT #53 AGGREGATE

NORTH
1" = 20'
00 10 20 40 80

JAMES GLASCOTT
REGISTERED
PE12400652
STATE OF INDIANA
PROFESSIONAL ENGINEER

WT GROUP JOB NUMBER - C2400072

WT Group
Engineering • Design • Consulting

WT GROUP
Structural | Mechanical/Electrical/Plumbing
Civil | Land Survey | Telecommunication| Aquatic
Accessibility Consulting | Design & Program Management
Engineering with Precision, Pace & Passion.
2675 Prairie Avenue | Hoffman Estates, IL 60192
P: 224.293.6333 | F: 224.293.6444
wtengineering.com

© COPYRIGHT 2025 THE WT GROUP, LLC

DLA ARCHITECTS Ltd.
www.dla-ltd.com
Two Pierce Place | Suite 1300 | Itasca | 60143 | 847.742.4063
form follows learning™

SCHOOL TOWN OF MUNSTER
2025 NEW TENNIS FACILITY
MUNSTER HIGH SCHOOL
8823 COLUMBIA AVE. MUNSTER, IN 46321

SCHOOL TOWN OF MUNSTER

DATE:	DESCRIPTION:
9/15/25	TOWN SUBMITTAL

ISSUED FOR BID

PROJECT # 2024.073
DATE: AUGUST 12, 2025
SHEET TITLE: SITE GRADING PLAN
SHEET: C-4.0

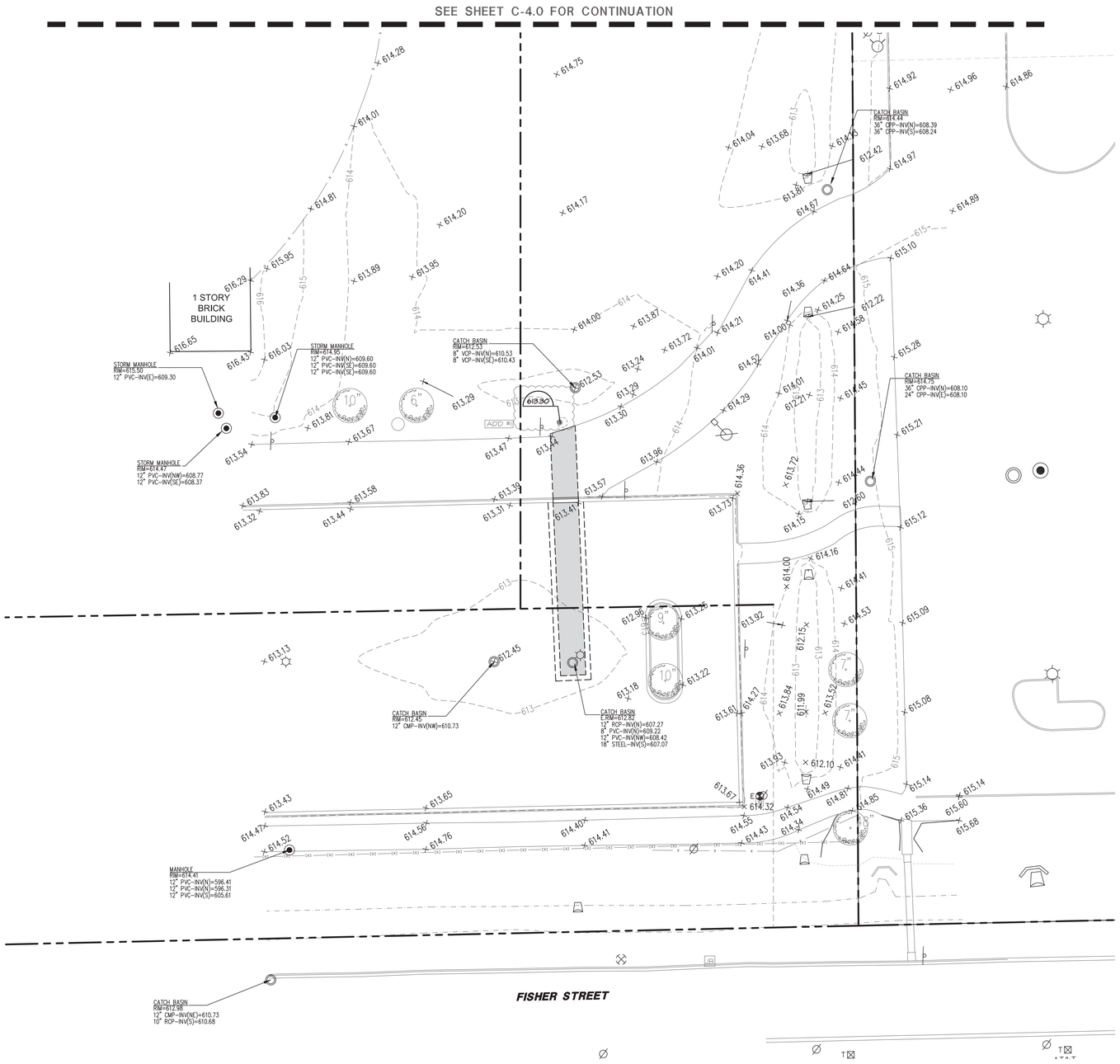

SITE GRADING NOTES:

A. EXISTING CONDITIONS AND TOPOGRAPHY SHOWN REPRESENTS SITE CONDITIONS PER THE TOPOGRAPHICAL SURVEY LAST DATED 06-25-2025, PREPARED BY TORRENGA SURVEYING, LLC. CONTRACTOR SHALL FIELD VERIFY EXISTING ELEVATIONS AND CONDITIONS (INCLUDING BUT NOT LIMITED TO VERIFICATION OF CONTROL AND ALL UTILITIES WHETHER DEPICTED OR NOT) PRIOR TO CONSTRUCTION AND NOTIFY ENGINEER OF ANY DISCREPANCIES.

B. ALL PROPOSED GRADES ARE GIVEN TO FINISHED GRADE, I.E. TOP OF PROPOSED ASPHALT, CONCRETE, TOP OF PROPOSED CURB, ETC. SEE DETAILS FOR PAVEMENT THICKNESS.

C. CONTRACTOR SHALL CONTACT INDIANA 811, A PRIVATE LOCATING SERVICE TO LOCATE ALL UNDERGROUND UTILITY LINES PRIOR TO STARTING ANY DEMOLITION AND/OR EXCAVATION. EXACT LOCATIONS OF ANY EXISTING ELECTRIC, GAS, TELEPHONE, ETC. LINES ARE UNKNOWN.

D. CONTRACTOR SHALL ENSURE POSITIVE SITE DRAINAGE AT THE END OF EACH WORKING DAY DURING CONSTRUCTION OPERATIONS. FAILURE TO PROVIDE ADEQUATE DRAINAGE WILL PRECLUDE THE CONTRACTOR FROM ANY POSSIBLE COMPENSATION REQUESTED DUE TO DELAYS OR UNSUITABLE MATERIALS CREATED AS A RESULT.

E. CONTRACTOR SHALL RESTORE ALL DISTURBED AREAS OUTSIDE OF CONSTRUCTION LIMITS TO ORIGINAL CONDITION OR BETTER.

F. CONTRACTOR SHALL REPAIR AT HIS EXPENSE ANY DAMAGE TO EXISTING ASPHALT, CONCRETE, CURBS, SIDEWALKS, ETC. RESULTING FROM CONSTRUCTION TRAFFIC AND/OR OPERATIONS. REPAIRS SHALL BE MADE TO THE SATISFACTION OF THE OWNER AND/OR ENGINEER.

G. CONTRACTOR TO UTILIZE CARE WHEN WORKING NEAR EXISTING UTILITIES TO REMAIN. ANY DAMAGE TO EXISTING UTILITIES NOT NOTED TO BE REMOVED SHALL BE REPAIRED AT CONTRACTOR'S EXPENSE TO THE SATISFACTION OF THE OWNER AND/OR ENGINEER.

H. ALL EXISTING TREES SHOWN ARE TO REMAIN UNLESS OTHERWISE NOTED.

I. ALL HANDICAP ACCESSIBLE ROUTES (SIDEWALKS, WALKWAYS, PAVEMENTS, ETC.) SHALL MAINTAIN A MAXIMUM CROSS SLOPE OF 2.00% AND A MAXIMUM LONGITUDINAL SLOPE OF 5.00%. ACCESSIBLE PARKING STALLS SHALL MAINTAIN A MAXIMUM SLOPE OF 2.00% IN ALL DIRECTIONS.

J. VOIDS LEFT BY ANY ITEM REMOVED UNDER ANY PROPOSED BUILDING, PAVEMENT, OR WALK OR WITHIN 24" THEREOF SHALL BE BACKFILLED WITH ENGINEERED FILL ACCORDING TO THE GEOTECHNICAL REPORT.

K. ALL FIRE ACCESS LANES WITHIN THE PROJECT AREA SHALL REMAIN IN SERVICE, CLEAN OF DEBRIS, AND ACCESSIBLE FOR USE BY EMERGENCY VEHICLES.

L. CONSTRUCTION ACCESS POINTS TO THE SITE SHALL BE PROTECTED IN SUCH A WAY AS TO PREVENT TRACKING OF MUD OR SOIL ONTO PUBLIC THOROUGHFARES. ALL SEDIMENT SPILLED, DROPPED, WASHED OR TRACKED ONTO PUBLIC RIGHTS-OF-WAY MUST BE REMOVED IMMEDIATELY BY THE CONTRACTOR.

M. ALL EXISTING SUBGRADE TO BE SCARIFIED (DISKED) TO A DEPTH OF 12" AND RE-COMPACTED, AND THEN TESTED USING A DYNAMIC CONE PENETROMETER. SEE GEOTECHNICAL REPORT FOR ADDITIONAL REQUIREMENTS.

N. ALL EXCESS SOILS THAT CANNOT BE USED AS SUITABLE FILL SHALL BE HAULED FROM THE SITE AND LEGALLY DISPOSED OF.

O. PREPARE SUBGRADE AS SPECIFIED WITHIN THE GEOTECHNICAL ENGINEERING REPORT DATED 11-6-2024 PREPARED BY GEOCON PROFESSIONAL SERVICES, LLC.

P. ALL TOPSOIL BENEATH PROPOSED STRUCTURES AND PAVEMENT SHALL BE REMOVED. REFER TO THE GEOTECHNICAL ENGINEERING REPORT DATED 11-8-2024 PREPARED BY GEOCON PROFESSIONAL SERVICES, LLC FOR EXISTING TOPSOIL DEPTHS.

Q. EXISTING PAVEMENT AGGREGATE BASE COURSE SHALL NOT BE RE-USED AS AGGREGATE BASE COURSE FOR THE NEW PAVEMENT SECTION.

GRADING LEGEND

627.77	EXISTING SPOT GRADE
000.00	PROPOSED SPOT GRADE
*000.00	INTERPOLATED SPOT GRADE
000.00	PROPOSED RIM ELEVATION
000	EXISTING CONTOUR LINE
000	PROPOSED CONTOUR LINE
	OVERLAND FLOW ARROW
	100 YEAR OVERLAND FLOW ROUTE
TP	TOP OF PAVEMENT ELEVATION
TW	TOP OF SIDEWALK ELEVATION
FF	FINISHED FLOOR ELEVATION
TC	TOP OF CURB ELEVATION
FL	FLOW LINE ELEVATION
ADJUST	ADJUST EXISTING RIM ELEVATION
	EXISTING CATCH BASIN / INLET
	EXISTING BEEHIVE CATCH BASIN
	EXISTING MANHOLE
	PROPOSED NYLOPLAST DRAIN BASIN
	PROPOSED INLET
	PROPOSED SQUARE NDS CATCH BASIN

HATCH LEGEND

NEW 5" CONCRETE SIDEWALK
5" PORTLAND CEMENT CONCRETE
4" INDOT #53 AGGREGATE

POSTTENSIONED CONCRETE TENNIS COURTS
(SEE ARCHITECTURAL PLANS FOR DETAILS)

NEW FULL DEPTH ASPHALT PAVEMENT
1-3/4" - 9.5MM HMA SURFACE COURSE
2-3/4" - 25MM HMA BASE
6" INDOT #53 AGGREGATE

NORTH

1" = 20'

00 10 20 40 80

JAMES GLASCOTT REGISTERED PE12400652 STATE OF INDIANA PROFESSIONAL ENGINEER

WT GROUP JOB NUMBER - C2400072

WT Group
Engineering • Design • Consulting

WT GROUP
Structural | Mechanical | Electrical | Plumbing
Civil | Land Survey | Telecommunication | Aquatic
Accessibility Consulting | Design & Program Management
Engineering with Precision, Pace & Passion.
2675 Prairie Avenue | Hoffman Estates, IL 60192
P: 224.293.5333 | F: 224.293.5444
wtengineering.com

© COPYRIGHT 2025 THE WT GROUP, LLC

DLA ARCHITECTS
www.dla-ltd.com
847.742.4063
Two Pierce Place | Suite 1300 | Itasca | 60143

form follows learning

SCHOOL TOWN OF MUNSTER
2025 NEW TENNIS FACILITY
MUNSTER HIGH SCHOOL
8823 COLUMBIA AVE. MUNSTER, IN 46321

SCHOOL TOWN MUNSTER

DATE:	DESCRIPTION:
9/15/25	TOWN SUBMITTAL

ISSUED FOR BID

PROJECT # 2024.073
DATE: AUGUST 12, 2025
SHEET TITLE: SITE GRADING PLAN
SHEET: C-4.1

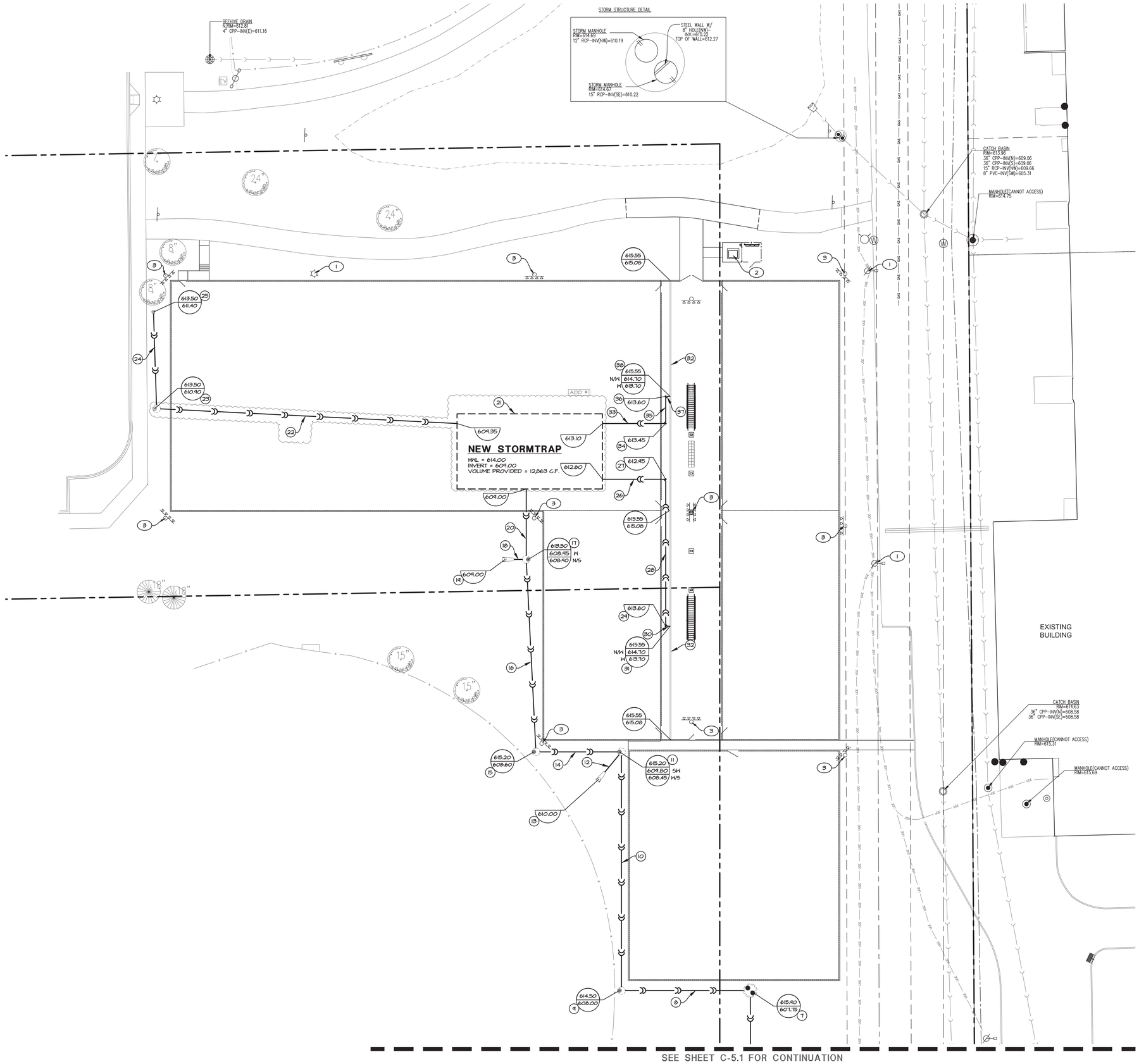

SITE UTILITY NOTES:

A. CONTRACTOR SHALL CONTACT INDIANA811 (811 OR 1-800-382-5544) AND PRIVATE LOCATING SERVICE TO LOCATE ALL UNDERGROUND UTILITY LINES PRIOR TO STARTING ANY DEMOLITION AND/OR EXCAVATION. EXACT LOCATIONS OF ANY EXISTING ELECTRIC, GAS, TELEPHONE, ETC. LINES ARE UNKNOWN.
B. CONTRACTOR TO UTILIZE CARE WHEN WORKING NEAR EXISTING UTILITIES TO REMAIN. ANY DAMAGE TO EXISTING UTILITIES NOT NOTED TO BE REMOVED SHALL BE REPAIRED AT THE CONTRACTOR'S EXPENSE AND TO THE SATISFACTION OF THE OWNER AND/OR ENGINEER.
C. CONTRACTOR SHALL EXCAVATE AND VERIFY IN FIELD ALL EXISTING UTILITY LOCATIONS, SIZES, CONDITIONS AND ELEVATIONS AT PROPOSED POINTS OF CONNECTION PRIOR TO ANY UNDERGROUND CONSTRUCTION. CONTRACTOR SHALL NOTIFY THE OWNER AND ENGINEER OF ANY DISCREPANCIES OR CONFLICTS PRIOR TO PROCEEDING WITH CONSTRUCTION.
D. REFER TO THE GENERAL NOTES AND SPECIFICATION SHEETS FOR ALL PIPE MATERIAL AND JOINT SPECIFICATIONS.
E. CONTRACTOR SHALL RESTORE ALL DISTURBED AREAS OUTSIDE OF CONSTRUCTION LIMITS TO ORIGINAL CONDITION OR BETTER.
F. CONTRACTOR SHALL VERIFY IN FIELD EXACT SIZE, MATERIAL, INVERT, PIPE ROUTING, AND SLOPE OF ALL EXISTING UTILITIES AND NOTIFY THE OWNER AND ENGINEER OF ANY DISCREPANCIES OR CONFLICTS PRIOR TO CONSTRUCTION.
G. THE CONTRACTOR IS RESPONSIBLE FOR THE STABILITY OF UTILITY TRENCHES DURING CONSTRUCTION AND SHALL PROVIDE TEMPORARY SHORING AND BRACING AS NECESSARY TO MAINTAIN STABILITY UNTIL CONSTRUCTION OF THE UTILITY IS COMPLETE IN ORDER TO MEET OSHA AND LOCAL CODES, AS WELL AS MANUFACTURER'S REQUIREMENTS.
H. ALL RCP STORM SEWER PIPE SHALL BE REINFORCED CONCRETE PIPE, CLASS IV, PER ASTM C-76 WITH FLEXIBLE (O-RING) GASKET JOINTS IN CONFORMANCE WITH ASTM C-443 AND SECTION 31-1.09 OF THE "STANDARD SPECIFICATIONS".
I. TRENCH BACKFILL MATERIAL SHALL BE PLACED AND COMPACTED TO A MINIMUM OF 95% MODIFIED PROCTOR DENSITY (ASTM D-1557) OVER ALL UNDERGROUND UTILITIES WHICH ARE CONSTRUCTED UNDER OR WITHIN 2 FEET OF ANY PROPOSED OR EXISTING PAVEMENT OR SIDEWALKS IN ACCORDANCE WITH THE STANDARD SPECIFICATIONS FOR ROAD AND BRIDGE CONSTRUCTION.
J. ADJUST RIM ELEVATIONS OF EXISTING STRUCTURES IN PAVEMENT AS NECESSARY TO MEET PROPOSED FINISHED GRADE.
K. CONTRACTOR TO COORDINATE ALL CONNECTIONS TO CITY UTILITIES AND STORM SEWERS WITH THE PUBLIC WORKS DEPARTMENT.
L. CONTRACTOR TO USE CAUTION WHEN EXCAVATING AT EXISTING UTILITY LINES.
M. ALL STORM MANHOLES SHALL HAVE OPEN LIDS UNLESS OTHERWISE SPECIFIED.
N. PROVIDE RUBBER MISSION COUPLING OR SIMILAR CONNECTION BETWEEN PIPES OF DISSIMILAR SIZE OR MATERIAL.
O. ALL EXISTING UTILITIES TO BE ABANDONED IN PLACE SHALL BE CAPPED WITH 2' LONG (MIN.) NON-SHRINK CONCRETE MORTAR PLUGS AT BOTH ENDS.

STORM SEWER

1. EXISTING STORM STRUCTURE TO REMAIN.
2. EXISTING STORM SEWER TO REMAIN.
3. EXISTING STORM STRUCTURE TO REMAIN. CORE DRILL AND CONNECT NEW STORM SEWER.
4. NEW 15" HDPE, 45 L.F. @ 0.26% SLOPE.
5. NEW 48" DIA. PRECAST CONCRETE CLOSED RIM MANHOLE.
6. NEW 15" HDPE, 174 L.F. @ 0.22% SLOPE.
7. NEW 72" DIA. PRECAST CONCRETE CATCH BASIN WITH 2.65" RESTRICTOR.
8. NEW 12" HDPE, 67 L.F. @ 0.37% SLOPE. ADD #1
9. NEW 48" DIA. PRECAST CONCRETE CLOSED RIM MANHOLE.
10. NEW 12" HDPE, 123 L.F. @ 0.31% SLOPE.
11. NEW 48" DIA. PRECAST CONCRETE CLOSED RIM MANHOLE.
12. NEW 12" HDPE, 18 L.F. @ 1.11% SLOPE.
13. NEW 12" PRECAST CONCRETE FLARED END SECTION WITH TRASH GRATE.
14. NEW 12" HDPE, 44 L.F. @ 0.34% SLOPE.
15. NEW 48" DIA. PRECAST CONCRETE CLOSED RIM MANHOLE.
16. NEW 12" HDPE, 99 L.F. @ 0.30% SLOPE.
17. NEW 48" DIA. PRECAST CONCRETE CLOSED RIM MANHOLE.
18. NEW 12" HDPE, 10 L.F. @ 0.50% SLOPE.
19. NEW 12" PRECAST CONCRETE FLARED END SECTION WITH TRASH GRATE.
20. NEW 12" RCP, 36 L.F. @ 0.28% SLOPE.
21. NEW STORMTRAP DETENTION SYSTEM TO BE INSTALLED PER MANUFACTURER'S SPECIFICATIONS. ADD #1
22. NEW 12" RCP, 155 L.F. @ 1.00% SLOPE.
23. NEW 48" DIA. PRECAST CONCRETE OPEN RIM MANHOLE.
24. NEW 12" HDPE, 50 L.F. @ 1.00% SLOPE.
25. NEW 24" DIA. PRECAST CONCRETE INLET.
26. NEW 8" HDPE, 33 L.F. @ 1.06% SLOPE.
27. NEW CLEANOUT.
28. NEW 8" HDPE, 75 L.F. @ 1.00% SLOPE.
29. NEW CLEANOUT.
30. NEW 6" HDPE, 3 L.F. @ 3.33% SLOPE.
31. NEW AGO SPORT SYSTEM 4000 CATCH BASIN.
32. NEW AGO SPORT SYSTEM 4000 TRENCH DRAIN WITH 0.60% BUILT-IN SLOPE AND ADA COMPLIANT GRATE, 231 L.F. COORDINATE GRATE COLOR WITH ARCHITECT PRIOR TO ORDERING.
33. NEW 8" HDPE, 33 L.F. @ 1.06% SLOPE.
34. NEW CLEANOUT.
35. NEW 8" HDPE, 14 L.F. @ 1.07% SLOPE.
36. NEW CLEANOUT.
37. NEW 6" HDPE, 3 L.F. @ 3.33% SLOPE.
38. NEW AGO SPORT SYSTEM 4000 CATCH BASIN.

MISCELLANEOUS NOTES

1. EXISTING AREA LIGHT TO REMAIN.
2. NEW PAD MOUNTED TRANSFORMER. (SEE SITE ELECTRICAL PLANS FOR DETAILS).
3. NEW SPORTS LIGHTING. (SEE SITE ELECTRICAL PLANS FOR DETAILS).

UTILITY LEGEND

- EXISTING STORM SEWER
- PROPOSED STORM SEWER
- EXISTING SANITARY SEWER
- EXISTING WATER MAIN
- EXISTING GAS SERVICE
- EXISTING UNDERGROUND ELECTRIC SERVICE
- EXISTING UNDERGROUND TELCO SERVICE
- EXISTING OVERHEAD LINES
- PROPOSED RIM ELEVATION
- PROPOSED INVERT ELEVATION
- EXISTING CATCH BASIN / INLET
- EXISTING BEEHIVE CATCH BASIN
- EXISTING MANHOLE

NORTH

1" = 20'

00 10 20 40 80

JAMES GLASCOTT REGISTERED PE12400652 STATE OF INDIANA PROFESSIONAL ENGINEER

WT GROUP JOB NUMBER - C2400072

WT Group
Engineering • Design • Consulting
WT GROUP
Structural | Mechanical | Electrical | Plumbing
Civil | Site Development | Environmental | Geospatial
Accessibility Consulting | Design & Program Management
Engineering with Precision. Pace & Passion.
2675 Prairie Avenue | Hoffman Estates, IL 60192
P: 224.293.5333 | F: 224.293.6444
wtengineering.com

© COPYRIGHT 2025 THE WT GROUP, LLC

DLA ARCHITECTS
www.dla-ltd.com
Two Pierce Place | Suite 1300 | Itasca | 60143 | 847.742.4063
form follows learning™

SCHOOL TOWN OF MUNSTER
2025 NEW TENNIS FACILITY
MUNSTER HIGH SCHOOL
8823 COLUMBIA AVE. MUNSTER, IN 46321

DATE:	DESCRIPTION:
9/15/25	TOWN SUBMITTAL

ISSUED FOR BID

PROJECT # 2024.073
DATE: AUGUST 12, 2025
SHEET TITLE: SITE UTILITY PLAN
SHEET: C-5.0

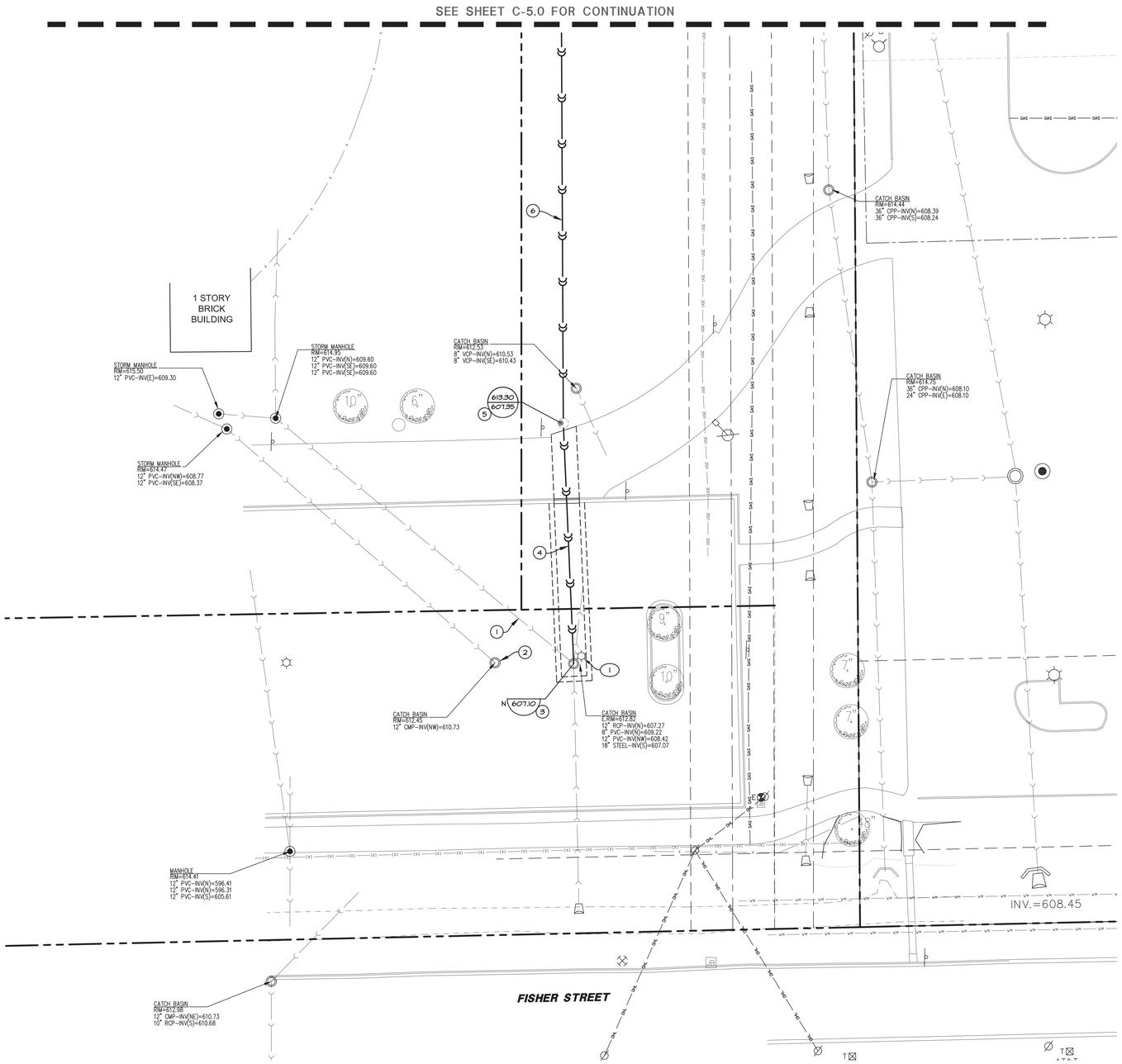

SITE UTILITY NOTES:

A. CONTRACTOR SHALL CONTACT INDIANA811 (811 OR 1-800-382-5544) AND PRIVATE LOCATING SERVICE TO LOCATE ALL UNDERGROUND UTILITY LINES PRIOR TO STARTING ANY DEMOLITION AND/OR EXCAVATION. EXACT LOCATIONS OF ANY EXISTING ELECTRIC, GAS, TELEPHONE, ETC. LINES ARE UNKNOWN.
B. CONTRACTOR TO UTILIZE CARE WHEN WORKING NEAR EXISTING UTILITIES TO REMAIN. ANY DAMAGE TO EXISTING UTILITIES NOT NOTED TO BE REMOVED SHALL BE REPAIRED AT THE CONTRACTOR'S EXPENSE AND TO THE SATISFACTION OF THE OWNER AND/OR ENGINEER.
C. CONTRACTOR SHALL EXCAVATE AND VERIFY IN FIELD ALL EXISTING UTILITY LOCATIONS, SIZES, CONDITIONS AND ELEVATIONS AT PROPOSED POINTS OF CONNECTION PRIOR TO ANY UNDERGROUND CONSTRUCTION. CONTRACTOR SHALL NOTIFY THE OWNER AND ENGINEER OF ANY DISCREPANCIES OR CONFLICTS PRIOR TO PROCEEDING WITH CONSTRUCTION.
D. REFER TO THE GENERAL NOTES AND SPECIFICATION SHEETS FOR ALL PIPE MATERIAL AND JOINT SPECIFICATIONS.
E. CONTRACTOR SHALL RESTORE ALL DISTURBED AREAS OUTSIDE OF CONSTRUCTION LIMITS TO ORIGINAL CONDITION OR BETTER.
F. CONTRACTOR SHALL VERIFY IN FIELD EXACT SIZE, MATERIAL, INVERT, PIPE ROUTING, AND SLOPE OF ALL EXISTING UTILITIES AND NOTIFY THE OWNER AND ENGINEER OF ANY DISCREPANCIES OR CONFLICTS PRIOR TO CONSTRUCTION.
G. THE CONTRACTOR IS RESPONSIBLE FOR THE STABILITY OF UTILITY TRENCHES DURING CONSTRUCTION AND SHALL PROVIDE TEMPORARY SHORING AND BRACING AS NECESSARY TO MAINTAIN STABILITY UNTIL CONSTRUCTION OF THE UTILITY IS COMPLETE IN ORDER TO MEET OSHA AND LOCAL CODES, AS WELL AS MANUFACTURER'S REQUIREMENTS.
H. ALL RCP STORM SEWER PIPE SHALL BE REINFORCED CONCRETE PIPE, CLASS IV, PER ASTM C-76 WITH FLEXIBLE (O-RING) GASKET JOINTS IN CONFORMANCE WITH ASTM C-443 AND SECTION 391-1.09 OF THE "STANDARD SPECIFICATIONS".
I. TRENCH BACKFILL MATERIAL SHALL BE PLACED AND COMPACTED TO A MINIMUM OF 95% MODIFIED PROCTOR DENSITY (ASTM D-1557) OVER ALL UNDERGROUND UTILITIES WHICH ARE CONSTRUCTED UNDER OR WITHIN 2 FEET OF ANY PROPOSED OR EXISTING PAVEMENT OR SIDEWALKS IN ACCORDANCE WITH THE STANDARD SPECIFICATIONS FOR ROAD AND BRIDGE CONSTRUCTION.
J. ADJUST RIM ELEVATIONS OF EXISTING STRUCTURES IN PAVEMENT AS NECESSARY TO MEET PROPOSED FINISHED GRADE.
K. CONTRACTOR TO COORDINATE ALL CONNECTIONS TO CITY UTILITIES AND STORM SEWERS WITH THE PUBLIC WORKS DEPARTMENT.
L. CONTRACTOR TO USE CAUTION WHEN EXCAVATING AT EXISTING UTILITY LINES.
M. ALL STORM MANHOLES SHALL HAVE OPEN LIDS UNLESS OTHERWISE SPECIFIED.
N. PROVIDE RUBBER MISSION COUPLING OR SIMILAR CONNECTION BETWEEN PIPES OF DISSIMILAR SIZE OR MATERIAL.
O. ALL EXISTING UTILITIES TO BE ABANDONED IN PLACE SHALL BE CAPPED WITH 2' LONG (MIN.) NON-SHRINK CONCRETE MORTAR PLUGS AT BOTH ENDS.

STORM SEWER

1. EXISTING STORM STRUCTURE TO REMAIN.
2. EXISTING STORM SEWER TO REMAIN.
3. EXISTING STORM STRUCTURE TO REMAIN. CORE DRILL AND CONNECT NEW STORM SEWER.
4. NEW 15" HDPE, 45 L.F. @ 0.26% SLOPE.
5. NEW 48" DIA. PRECAST CONCRETE CLOSED RIM MANHOLE.
6. NEW 15" HDPE, 174 L.F. @ 0.22% SLOPE.
7. NEW 72" DIA. PRECAST CONCRETE CATCH BASIN WITH 2.65" RESTRICTOR.
8. NEW 12" HDPE, 67 L.F. @ 0.37% SLOPE.
9. NEW 48" DIA. PRECAST CONCRETE CLOSED RIM MANHOLE.
10. NEW 12" HDPE, 123 L.F. @ 0.31% SLOPE.
11. NEW 48" DIA. PRECAST CONCRETE CLOSED RIM MANHOLE.
12. NEW 12" HDPE, 18 L.F. @ 1.11% SLOPE.
13. NEW 12" PRECAST CONCRETE FLARED END SECTION WITH TRASH GRATE.
14. NEW 12" HDPE, 44 L.F. @ 0.34% SLOPE.
15. NEW 48" DIA. PRECAST CONCRETE CLOSED RIM MANHOLE.
16. NEW 12" HDPE, 99 L.F. @ 0.30% SLOPE.
17. NEW 48" DIA. PRECAST CONCRETE CLOSED RIM MANHOLE.
18. NEW 12" HDPE, 10 L.F. @ 0.50% SLOPE.
19. NEW 12" PRECAST CONCRETE FLARED END SECTION WITH TRASH GRATE.
20. NEW 12" RCP, 36 L.F. @ 0.28% SLOPE.
21. NEW STORMTRAP DETENTION SYSTEM TO BE INSTALLED PER MANUFACTURER'S SPECIFICATIONS.
22. NEW 12" RCP, 155 L.F. @ 1.00% SLOPE.
23. NEW 48" DIA. PRECAST CONCRETE OPEN RIM MANHOLE.
24. NEW 12" HDPE, 50 L.F. @ 1.00% SLOPE.
25. NEW 24" DIA. PRECAST CONCRETE INLET.
26. NEW 8" HDPE, 33 L.F. @ 1.06% SLOPE.
27. NEW CLEANOUT.
28. NEW 8" HDPE, 75 L.F. @ 1.00% SLOPE.
29. NEW CLEANOUT.
30. NEW 6" HDPE, 3 L.F. @ 3.33% SLOPE.
31. NEW AGO SPORT SYSTEM 4000 CATCH BASIN.
32. NEW AGO SPORT SYSTEM 4000 TRENCH DRAIN WITH 0.60% BUILT-IN SLOPE AND ADA COMPLIANT GRATE, 231 L.F. COORDINATE GRATE COLOR WITH ARCHITECT PRIOR TO ORDERING.
33. NEW 8" HDPE, 33 L.F. @ 1.06% SLOPE.
34. NEW CLEANOUT.
35. NEW 8" HDPE, 14 L.F. @ 1.07% SLOPE.
36. NEW CLEANOUT.
37. NEW 6" HDPE, 3 L.F. @ 3.33% SLOPE.
38. NEW AGO SPORT SYSTEM 4000 CATCH BASIN.

MISCELLANEOUS NOTES

1. EXISTING AREA LIGHT TO REMAIN.
2. NEW PAD MOUNTED TRANSFORMER. (SEE SITE ELECTRICAL PLANS FOR DETAILS).
3. NEW SPORTS LIGHTING. (SEE SITE ELECTRICAL PLANS FOR DETAILS).

UTILITY LEGEND

- EXISTING STORM SEWER
- PROPOSED STORM SEWER
- EXISTING SANITARY SEWER
- EXISTING WATER MAIN
- EXISTING GAS SERVICE
- EXISTING UNDERGROUND ELECTRIC SERVICE
- EXISTING UNDERGROUND TELCO SERVICE
- EXISTING OVERHEAD LINES
- PROPOSED RIM ELEVATION
- PROPOSED INVERT ELEVATION
- EXISTING CATCH BASIN / INLET
- EXISTING BEEHIVE CATCH BASIN
- EXISTING MANHOLE

NORTH

1" = 20'

00 10 20 40 80

JAMES GLASCOTT REGISTERED PE12400652 STATE OF INDIANA PROFESSIONAL ENGINEER

WT GROUP JOB NUMBER - C2400072

WT Group
Engineering • Design • Consulting

WT GROUP
Structural | Mechanical|Electrical|Plumbing
Civil | Land Survey | Telecommunications| Aquatic
Accessibility Consulting | Design & Program Management
Engineering with Precision, Pace & Passion.
2675 Prairie Avenue | Hoffman Estates, IL 60192
P: 224.293.6333 | F: 224.293.6444
wtengineering.com

© COPYRIGHT 2025 THE W-T GROUP, LLC

DLA ARCHITECTS LLC
www.dla-ltd.com
Two Pierce Place | Suite 1300 | Itasca | 60143 | 847.742.4063

form follows learning™

SCHOOL TOWN OF MUNSTER
2025 NEW TENNIS FACILITY
MUNSTER HIGH SCHOOL
8823 COLUMBIA AVE. MUNSTER, IN 46321

SCHOOL TOWN OF MUNSTER

DATE:	DESCRIPTION:
9/15/25	TOWN SUBMITTAL

ISSUED FOR BID

PROJECT # 2024.073
DATE: AUGUST 12, 2025
SHEET TITLE: SITE UTILITY PLAN
SHEET: C-5.1

StormTrap®

MODULAR CONCRETE
STORMWATER MANAGEMENT

SHEET INDEX	
PAGE	DESCRIPTION
0.0	COVER SHEET
1.0	GENERAL NOTES
1.1	SINGLETRAP DESIGN CRITERIA
2.0	SINGLETRAP SYSTEM LAYOUT
3.0	SINGLETRAP INSTALLATION SPECIFICATION
3.1	SINGLETRAP INSTALLATION SPECIFICATION
4.0	SINGLETRAP BACKFILL SPECIFICATION
5.0	PIPE/ACCESS OPENING SPECIFICATION
6.0	SPLASH PAD & GEOWEB DETAILS
7.0	SINGLETRAP MODULE TYPES

THE STORMTRAP DRAWINGS SHALL NOT BE ALTERED OR MANIPULATED IN WHOLE OR IN PART WITHOUT WRITTEN CONSENT OF STORMTRAP. USE OF THESE DRAWINGS IS STRICTLY GRANTED TO YOU, OUR CLIENT, FOR THE SPECIFIED AND NAMED PROJECT ONLY. THESE DRAWINGS ARE FOR YOUR REFERENCE ONLY AND SHALL NOT BE USED FOR MANUFACTURING PURPOSES.

STORMTRAP CONTACT INFORMATION

STORMTRAP SUPPLIER: STORMTRAP
CONTACT NAME: Brian Rieger
CELL PHONE: (815) 258-1261
SALES EMAIL: brieger@stormtrap.com

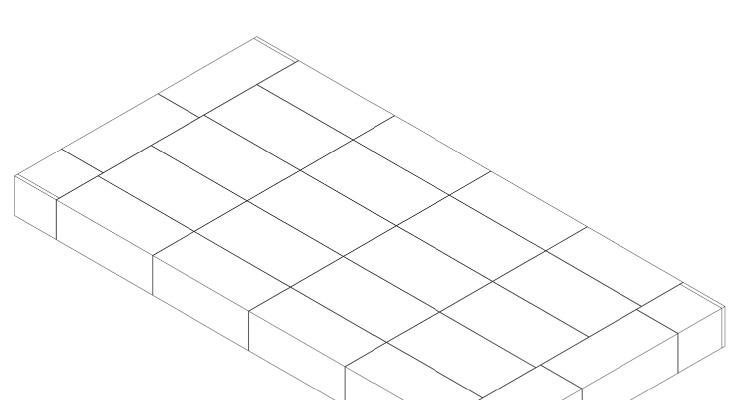

School Town of Munster New Tennis Courts
Munster , IN

StormTrap® PATENTS LISTED AT: [HTTP://STORMTRAP.COM/PATENT]
1287 WINDHAM PARKWAY ROMEOVILLE, IL 60446
P:815-941-4549 / F:331-318-5347
ENGINEER INFORMATION: WT Group 2675 Pratum Ave Hoffman Estate, IL 60192 224.293.6333
PROJECT INFORMATION: School Town of Munster New Tennis Courts Munster, IN
CURRENT ISSUE DATE: 07/30/2025
ISSUED FOR: PRELIMINARY

REV.	DATE:	ISSUED FOR:	DWN BY:
⚠	07/30/2025	PRELIMINARY	KS

SCALE: NTS
SHEET TITLE: COVER SHEET
SHEET NUMBER: 0.0

GENERAL NOTES:

1. STRUCTURE PROXIMITY LOADING DISCLAIMER:

STORMTRAP MODULES AND FOUNDATION ARE NOT DESIGNED TO ACCEPT ANY ADDITIONAL LOADING FROM ANY NEARBY STRUCTURES NEXT TO OR OVER THE TOP OF STORMTRAP. EXAMPLES OF NEARBY STRUCTURES MAY INCLUDE BUT ARE NOT LIMITED TO BUILDINGS, FOUNDATION ELEMENTS, RETAINING WALLS, LIGHT POLES, BOLLARDS, SIGNPOSTS, FENCES. ADDITIONALLY, STORMTRAP IS NOT RESPONSIBLE FOR INSTALLATION CONFLICTS ARISING FROM ANY OF THESE NEARBY STRUCTURES. IF ADDITIONAL LOADING CONSIDERATIONS ARE REQUIRED FOR STRUCTURAL DESIGN OF STORMTRAP, PLEASE CONTACT STORMTRAP IMMEDIATELY. FOR LIGHT POLES SHOWN OVER THE TOP OF THE SYSTEM, STORMTRAP WILL PROVIDE A 5'-0" LATERAL DISTANCE CAVITY AROUND THE LIGHT POLE TO ACCOMMODATE IT. THE EOR TO TAKE RESPONSIBILITY FOR ENSURING THE LIGHT POLE IS NOT INFLICTING ANY LOADING ON THE STORMTRAP MODULES AND FOUNDATION.

2. TREE LOADING DISCLAIMER:

THE NUMBER OF TREES OR WEIGHT OF TOTAL PLANT MATERIAL PRESENT ON TOP OF A SINGLE STORMTRAP MODULE SHALL NOT EXCEED 16,000 LBS. THE REQUIREMENTS LISTED HERE APPLY AT BOTH THE TIME OF INSTALLATION AND FOR THE LIFE OF THE TREES AND PLANTS IN QUESTION. THE EOR AND LANDSCAPE ARCHITECT ARE RESPONSIBLE FOR ENSURING THAT TREE AND OTHER PLANT ROOTS DO NOT INTERFERE WITH OR COMPROMISE THE FUNCTIONAL AND STRUCTURAL INTEGRITY OF STORMTRAP'S UNDERGROUND MODULES. APPROPRIATE MEASURES SHOULD BE TAKEN TO PREVENT ROOT GROWTH INTO THE STORMTRAP SYSTEM FROM ADJACENT OR OVERHEAD TREES. FURTHERMORE, THE ROOTS OF THE TREES MUST BE CONTAINED TO PREVENT FUTURE DAMAGE TO THE STORMTRAP SYSTEM. STORMTRAP ACCEPTS NO LIABILITY FOR DAMAGES CAUSED BY TREES OR OTHER VEGETATION PLACED AROUND OR ON TOP OF THE SYSTEM.

3. PRE-TREATMENT/SEDIMENT/FILTER CHAMBER DISCLAIMER:

FOR SYSTEMS CONTAINING PRE-TREATMENT, SEDIMENTATION AND/OR FILTER CHAMBERS; IF REQUIRED TO BE SEALED TO PREVENT SAND AND/OR PRE-TREATED WATER FROM MIGRATING INTO ADJOINING MODULES, IT IS THE SOLE RESPONSIBILITY OF THE INSTALLING CONTRACTOR TO ENSURE THAT THOSE MODULES ARE SEALED.

4. OUTLET CONTROL STRUCTURE DISCLAIMER (IF SHOWN ON THESE PLANS):

IF A WATERTIGHT SOLUTION IS REQUIRED FOR AN OUTLET CONTROL STRUCTURE, ALL EXTERIOR COLD JOINTS, INCLUDING JOINT BETWEEN TOP AND BASE MODULES, BETWEEN TOP AND BASE OF ADJOINING SYMONS WALLS, AND JOINTS BETWEEN MODULE AND ADJACENT END PANELS WILL BE THE SOLE RESPONSIBILITY OF THE INSTALLING CONTRACTOR TO PROVIDE AND INSTALL THE WATERTIGHT APPLICATION PER THE EOR'S SPECIFICATION.

SHEET TITLE: GENERAL NOTES
SHEET NUMBER: 1.0

STRUCTURAL DESIGN LOADING CRITERIA	
LIVE LOADING:	AASHTO HS-20 HIGHWAY LOADING
GROUND WATER TABLE:	@ ELEV. 609.00'
SOIL BEARING PRESSURE:	4000PSF
SOIL DENSITY:	120 PCF
EQUIVALENT UNSATURATED LATERAL ACTIVE EARTH PRESSURE:	35 PSF / FT.
EQUIVALENT SATURATED LATERAL ACTIVE EARTH PRESSURE:	80 PSF/FT. (IF WATER TABLE PRESENT)
APPLICABLE CODES:	ASTM C857 ACI-318
BACKFILL TYPE:	SEE SHEET 4.0 FOR BACKFILL OPTIONS

STORMTRAP SYSTEM INFORMATION	
UNIT HEADROOM:	5'-0" SINGLETRAP
TOTAL STORAGE PROV:	12,863.08 CUBIC FEET

SITE SPECIFIC DESIGN CRITERIA

1. STORMTRAP UNITS SHALL BE MANUFACTURED AND INSTALLED ACCORDING TO SHOP DRAWINGS APPROVED BY THE INSTALLING CONTRACTOR AND ENGINEER OF RECORD. THE SHOP DRAWINGS SHALL INDICATE SIZE AND LOCATION OF ROOF OPENINGS AND INLET/ OUTLET PIPE TYPES, SIZES, INVERT ELEVATIONS AND SIZE OF OPENINGS.
2. COVER RANGE: MIN. 1.30' MAX. 2.00' CONSULT STORMTRAP FOR ADDITIONAL COVER OPTIONS.
3. ALL DIMENSIONS AND SOIL CONDITIONS, INCLUDING BUT NOT LIMITED TO GROUNDWATER AND SOIL BEARING CAPACITY ARE REQUIRED TO BE VERIFIED IN THE FIELD BY OTHERS PRIOR TO STORMTRAP INSTALLATION.
4. FOR STRUCTURAL CALCULATIONS THE GROUND WATER TABLE IS ASSUMED TO BE @ ELEV. 609.00' IF WATER TABLE IS DIFFERENT THAN ASSUMED, CONTACT STORMTRAP.

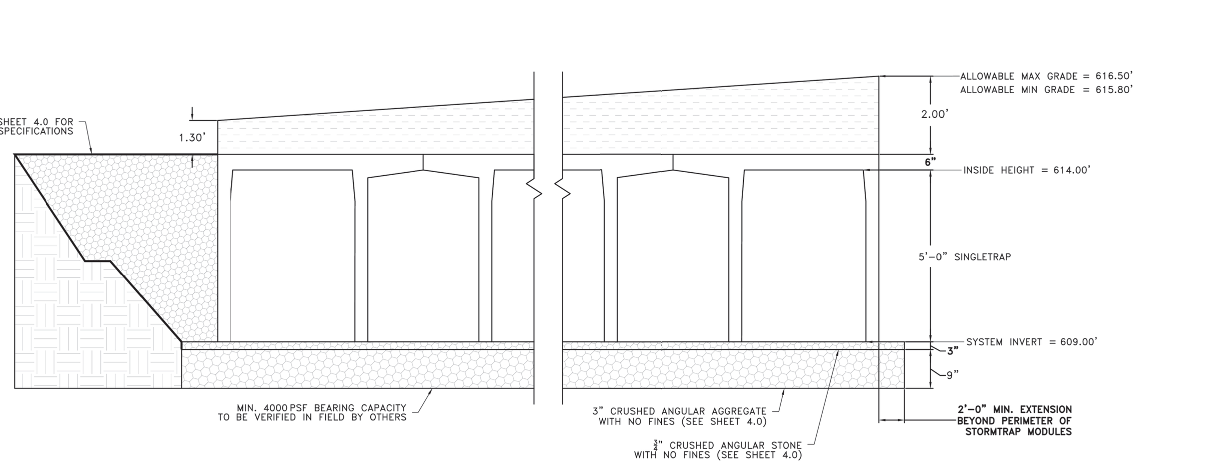

5'-0" SINGLETRAP

SHEET TITLE: SINGLETRAP DESIGN CRITERIA
SHEET NUMBER: 1.1

BILL OF MATERIALS			
QTY.	UNIT TYPE	DESCRIPTION	WEIGHT
0	I	5'-0" SINGLETRAP	0
12	II	5'-0" SINGLETRAP	17906
0	III	5'-0" SINGLETRAP	0
12	IV	5'-0" SINGLETRAP	16618
0	VII	5'-0" SINGLETRAP	0
0	VII-1	5'-0" SINGLETRAP	0
0	VII-2	5'-0" SINGLETRAP	0
0	VII-3	5'-0" SINGLETRAP	0
0	VII-4	5'-0" SINGLETRAP	0
0	SPIII	5'-0" SINGLETRAP	VARIES
2	SPIV	5'-0" SINGLETRAP	VARIES
0	T2 PANEL	6" THICK PANEL	0
4	T4 PANEL	6" THICK PANEL	2733
0	T7 PANEL	6" THICK PANEL	0
6	JOINTWRAP	150' PER ROLL	
0	JOINTTAPE	14.5' PER ROLL	
TOTAL PIECES = 26			
TOTAL PANELS = 4			
HEAVIEST PICK WEIGHT = 17,906			

DESIGN CRITERIA

ALLOWABLE MAX GRADE = 616.50'
ALLOWABLE MIN GRADE = 615.80'
INSIDE HEIGHT ELEVATION = 614.00'
SYSTEM INVERT = 609.00'

NOTES:

1. DIMENSIONING OF STORMTRAP SYSTEM SHOWN BELOW ALLOW FOR A 3/4" GAP BETWEEN EACH MODULE.
2. ALL DIMENSIONS TO BE VERIFIED IN THE FIELD BY OTHERS.
3. SEE SHEET 3.0 FOR INSTALLATION SPECIFICATIONS.
4. SP - INDICATES A MODULE WITH MODIFICATIONS.
5. P - INDICATES A MODULE WITH A PANEL ATTACHMENT.
6. CONTRACTORS RESPONSIBILITY TO ENSURE CONSISTENCY/ACCURACY TO FINAL ENGINEER OF RECORD PLAN SET.
7. IN ORDER FOR STORMTRAP TO GENERATE APPROVAL DRAWINGS, CIVIL ENGINEERING DRAWINGS MUST BE PROVIDED TO STORMTRAP AND SHALL INCLUDE ALL PIPE SIZES, PIPE MATERIAL, PIPE INVERT ELEVATIONS, ACCESS OPENING SIZE AND SHAPE. IN ADDITION, FINAL GRADING PLANS SHALL ALSO INCLUDE MINIMUM AND MAXIMUM GRADES OVER THE TOP OF THE STORMTRAP SYSTEM.

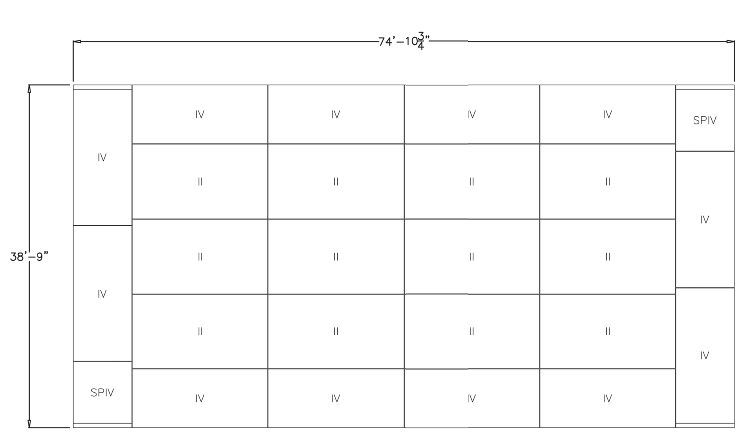

SHEET TITLE: SINGLETRAP SYSTEM LAYOUT
SHEET NUMBER: 2.0

STORMTRAP INSTALLATION SPECIFICATION

1. STORMTRAP SHALL BE INSTALLED IN ACCORDANCE WITH ASTM C891 (STANDARD PRACTICE FOR INSTALLATION OF UNDERGROUND PRECAST CONCRETE UTILITY STRUCTURES). THE FOLLOWING ADDITIONS AND/OR EXCEPTIONS ARE PROVIDED FOR EMPHASIS. THE MENTION OF THESE ITEMS DOES NOT PRECLUDE THE INSTALLING CONTRACTOR FROM FOLLOWING ASTM C891 IN ITS ENTIRETY AND IMPLEMENTING ALL APPROPRIATE MEASURES. THE INSTALLING CONTRACTOR OWNS AND IS RESPONSIBLE FOR THE STORMTRAP SYSTEM UPON REMOVAL OF THE MODULES FROM THE DELIVERY TRUCK THROUGH 'FINAL CONSTRUCTION'. FINAL CONSTRUCTION IS ACHIEVED WHEN ALL MODULES ARE SET, FULLY BACKFILLED, AND WHEN FINAL FINISHED GRADES ARE REACHED. THE CONTRACTOR IS RESPONSIBLE FOR ANY COUNTERMEASURES NECESSARY TO RESIST UPLIFT/BUOYANCY BEFORE 'FINAL CONSTRUCTION' IS ACHIEVED.
2. IT IS THE RESPONSIBILITY OF THE INSTALLING CONTRACTOR TO ENSURE THAT PROPER/ADEQUATE EQUIPMENT IS USED TO SET/INSTALL THE MODULES.
3. THE AGGREGATE FOUNDATION HAS BEEN DESIGNED BASED ON THE FOLLOWING ASSUMPTIONS. THESE ASSUMPTIONS WILL NEED TO BE VERIFIED BY A GEOTECHNICAL ENGINEER WHICH WILL NEED TO BE EMPLOYED BY THE OWNER.

3.1. A QUALIFIED GEOTECHNICAL ENGINEER WILL BE EMPLOYED, BY OWNER, TO PROVIDE ASSISTANCE IN EVALUATING THE EXISTING SOIL CONDITIONS BELOW THE PROPOSED ENGINEERED STONE FOUNDATION. IF A STONE FOUNDATION DESIGN IS TO BE USED, THE BEARING PRESSURE OF THE SOILS BELOW THE STONE WILL NEED TO MEET OR EXCEED ALLOWABLE CAPACITY. IF THIS IS NOT POSSIBLE, THE STONE FOUNDATION MAY NOT BE AN OPTION FOR THIS LOCATION.

3.2. A QUALIFIED GEOTECHNICAL ENGINEER WILL BE EMPLOYED, BY OWNER, TO EVALUATE A SOURCE OF STONE AGGREGATES THAT WILL BE PLACED ON PROPERLY COMPACTED SOILS (SEE SHEET 1.1 FOR SOIL BEARING CAPACITY REQUIREMENTS). THE AGGREGATE BASE COURSE FOR WHICH THE STORMTRAP SYSTEM WILL BEAR DIRECTLY ON SHALL CONSIST OF A 3" THICK BED OF ¾" DIAMETER ANGULAR STONE, WELL COMPACTED AND SEATED, WITH NO FINES. AND A 9" THICK BED OF 3" ANGULAR AGGREGATE (SEE SHEET 4.0 FOR FURTHER DESCRIPTION/EXPLANATION). PLEASE NOTE THAT THESE ARE ONLY MINIMUM RECOMMENDATIONS AND A QUALIFIED GEOTECHNICAL ENGINEER SHALL BE USED TO DETERMINE THE EXACT REQUIREMENTS FOR THE LOCATIONS THAT THE STORMTRAP SYSTEM IS TO BE LOCATED.

3.3. THE CONTRACTOR SHALL REMOVE ANY AND ALL EXPANDABLE OR COLLAPSIBLE SOILS AT THE DIRECTION OF A QUALIFIED GEOTECHNICAL ENGINEER.

3.4. THE AGGREGATE FOUNDATION SHALL BE INSTALLED SUCH THAT THE AGGREGATE EXTENDS A MINIMUM OF 2'-0" PAST THE OUTSIDE OF THE SYSTEM (SEE DETAIL 1).

3.5. THE ¾" AGGREGATE SHALL BE COMPACTED USING A VIBRATING ROLLER WITH ITS' FULL DYNAMIC FORCE APPLIED TO ACHIEVE A FLAT SURFACE.

3.6. DISK, DRY AND COMPACT THE TOP 8" OF THE SUBGRADE SOILS TO 95% OF THE STANDARD DRY DENSITY AND 110% OPTIMUM MOISTURE CONTENT.

3.7. AGGREGATE SHALL BE GRADED WITHIN +/- ¼" OF THE GRADE SHOWN ON THE PLANS.

3.8. MINIMUM SOIL BEARING CAPACITY LISTED ON SHEET 1.1 SHALL BE VERIFIED IN FIELD BY OTHERS.

4. THE STORMTRAP MODULES SHALL BE PLACED SUCH THAT THE MAXIMUM SPACE BETWEEN ADJACENT MODULES DOES NOT EXCEED ¾" (SEE DETAIL 2). IF THE SPACE EXCEEDS ¾", THE MODULES SHALL BE RESET WITH APPROPRIATE ADJUSTMENT MADE TO LINE AND GRADE TO BRING THE SPACE INTO SPECIFICATION.
5. STORMTRAP MODULES ARE NOT WATERTIGHT.
6. ALL EXTERIOR ROOF AND EXTERIOR VERTICAL WALL JOINTS BETWEEN ADJACENT STORMTRAP MODULES SHALL BE SEALED WITH 8" WIDE PRE-FORMED, COLD-APPLIED, SELF-ADHERING ELASTOMERIC RESIN, BONDED TO A WOVEN , HIGHLY PUNCTURE RESISTANT POLYMER WRAP, CONFORMING TO ASTM C891 AND SHALL BE INTEGRATED WITH PRIMER SEALANT AS APPROVED BY STORMTRAP (SEE DETAILS 2, 3, & 4). THE JOINT WRAP DOES NOT PROVIDE A WATERTIGHT SEAL. THE SOLE PURPOSE OF THE JOINT WRAP IS TO PROVIDE A SILT AND SOIL TIGHT SYSTEM. THE ADHESIVE EXTERIOR JOINT WRAP SHALL BE INSTALLED ACCORDING TO THE FOLLOWING INSTALLATION INSTRUCTIONS:

6.1. USE A BRUSH OR WET CLOTH TO THOROUGHLY CLEAN THE OUTSIDE SURFACE AT THE POINT WHERE THE JOINT WRAP IS TO BE APPLIED.

6.2. A RELEASE PAPER PROTECTS THE ADHESIVE SIDE OF THE JOINT WRAP. PLACE THE ADHESIVE TAPE (ADHESIVE SIDE DOWN) AROUND THE STRUCTURE, REMOVING THE RELEASE PAPER AS YOU GO. PRESS THE JOINT WRAP FIRMLY AGAINST THE STORMTRAP MODULE SURFACE WHEN APPLYING.

7. IF THE CONTRACTOR NEEDS TO CANCEL ANY SHIPMENTS, THEY MUST DO SO 48 HOURS PRIOR TO THEIR SCHEDULED ARRIVAL AT THE JOB SITE. IF CANCELED AFTER THAT TIME, PLEASE CONTACT THE PROJECT MANAGER.
8. IF THE STORMTRAP MODULE(S) IS DAMAGED IN ANY WAY PRIOR, DURING, OR AFTER INSTALL, STORMTRAP, MUST BE CONTACTED IMMEDIATELY TO ASSESS THE DAMAGE AND TO DETERMINE WHETHER OR NOT THE MODULE(S) WILL NEED TO BE REPLACED. IF ANY MODULE ARRIVES AT THE JOBSITE DAMAGED DO NOT UNLOAD IT; CONTACT STORMTRAP, IMMEDIATELY. ANY DAMAGE NOT REPORTED BEFORE THE TRUCK IS UNLOADED WILL BE THE CONTRACTOR'S RESPONSIBILITY.
9. STORMTRAP MODULES CANNOT BE ALTERED IN ANY WAY AFTER MANUFACTURING WITHOUT WRITTEN CONSENT FROM STORMTRAP.

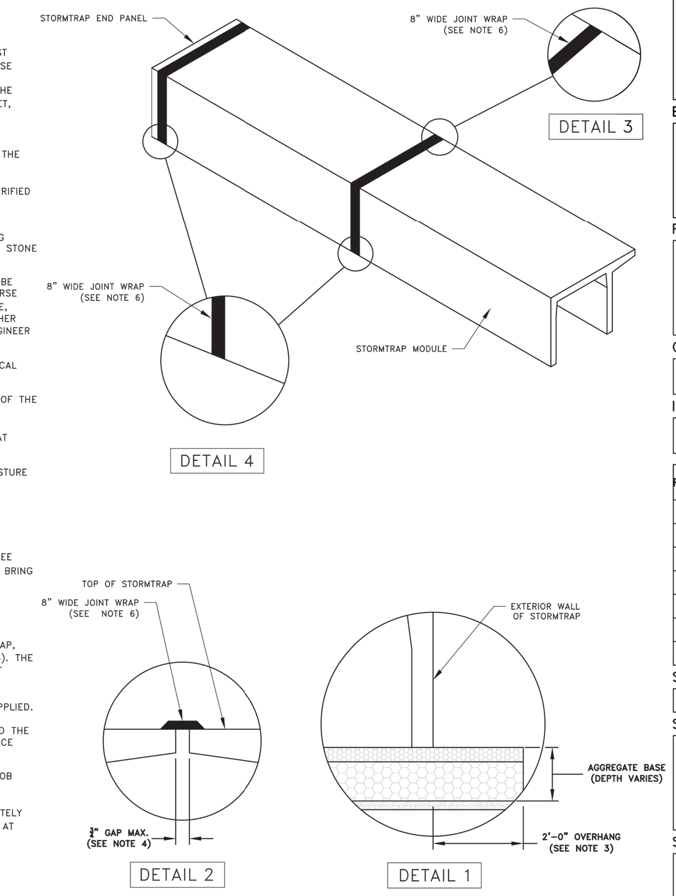

SHEET TITLE: SINGLETRAP INSTALLATION SPECIFICATION
SHEET NUMBER: 3.0

STORMTRAP MODULE LIFTING SPECIFICATION

1. IT IS THE CONTRACTOR'S RESPONSIBILITY TO ENSURE THAT ALL (4) CHAINS/CABLES ARE SECURED PROPERLY TO THE LIFTING ANCHORS AND IN EQUAL TENSION WHEN LIFTING THE STORMTRAP MODULE.
2. MINIMUM 7'-0" CHAIN/CABLE LENGTH TO BE USED TO LIFT STORMTRAP MODULES (SUPPLIED BY CONTRACTOR).
3. CONTRACTOR TO ENSURE MINIMUM LIFTING ANGLE IS 60° FROM TOP SURFACE OF STORMTRAP MODULE. SEE DETAIL.
4. IT IS UNDERSTOOD AND AGREED THAT AT ALL TIMES DURING WHICH HOISTING AND RIGGING EQUIPMENT IS BEING SUPPLIED TO THE PURCHASER, OPERATOR OF SUCH EQUIPMENT SHALL BE IN CHARGE OF HIS ENTIRE EQUIPMENT AND SHALL AT ALL TIMES BE THE JUDGE OF THE SAFETY AND PROPERTY OF ANY SUGGESTION TO HIM FROM THE SELLER, ITS AGENTS OR EMPLOYEES. PURCHASER AGREES TO SAVE, INDEMNIFY AND HOLD HARMLESS SELLER FROM ALL LOSS, CLAIMS, DEMANDS OR CAUSES OF ACTION, WHICH MAY ARISE FROM THE EXISTENCE OR OPERATION OF SAID EQUIPMENT.

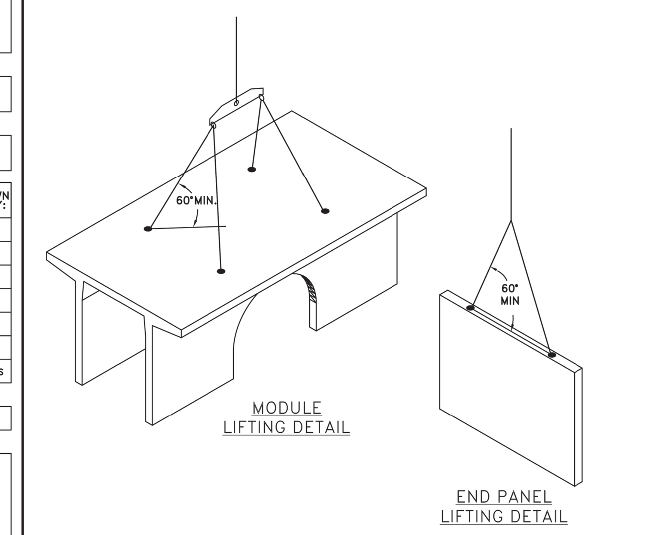

MODULE LIFTING DETAIL

END PANEL LIFTING DETAIL

END PANEL ERECTION/INSTALLATION SPECIFICATION

1. END PANELS WILL BE SUPPLIED TO CLOSE OFF OPEN ENDS OF ROWS.
2. PANELS SHALL BE INSTALLED IN A TILT UP FASHION DIRECTLY ADJACENT TO OPEN END OF MODULE (REFER TO SHEET 2.0 FOR END PANEL LOCATIONS). SIDE WITH LIFTERS INDICATES OUTSIDE FACE.
3. CONNECTION HOOKS WILL BE SUPPLIED WITH END PANELS TO SECURELY CONNECT PANEL TO ADJACENT STORMTRAP MODULE (SEE PANEL CONNECTION ELEVATION VIEW).
4. ONCE CONNECTION HOOK IS ATTACHED, LIFTING CLUTCHES MAY BE REMOVED.
5. JOINT WRAP SHALL BE PLACED AROUND PERIMETER JOINT PANEL (SEE SHEET 3.0).

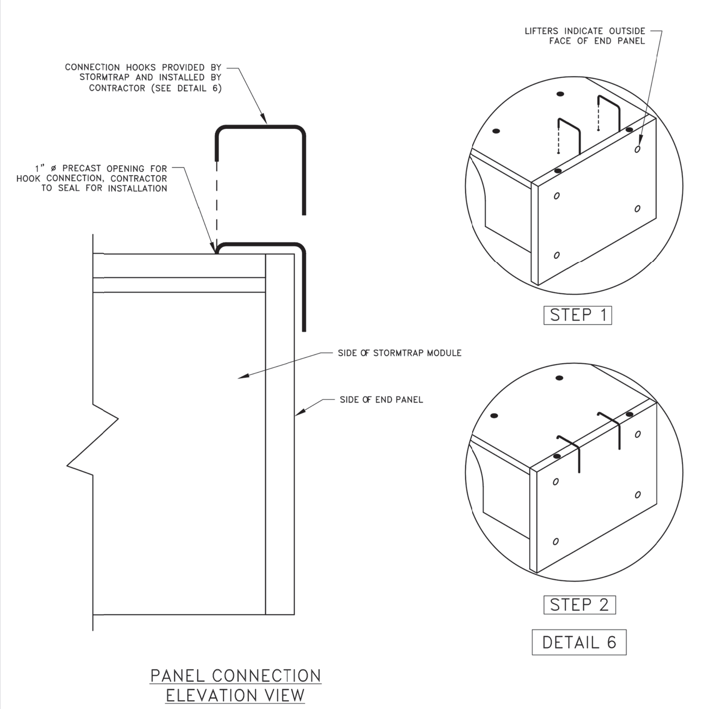

PANEL CONNECTION ELEVATION VIEW

SHEET TITLE: SINGLETRAP INSTALLATION SPECIFICATION
SHEET NUMBER: 3.1

ZONE CHART		
ZONES	ZONE DESCRIPTIONS	REMARKS
ZONE 1A	FOUNDATION AGGREGATE	#5 (¾") STONE ANGULAR AGGREGATE (SEE NOTE 4 FOR DESCRIPTION)
ZONE 1B	FOUNDATION AGGREGATE (INFILTRATION NOT ALLOWED)	3" RECYCLED CRUSHED CONCRETE (SEE NOTES 5 & 6 FOR DESCRIPTION)
	FOUNDATION AGGREGATE (INFILTRATION ALLOWED)	3" STONE AGGREGATE (SEE NOTE 5)
ZONE 2	BACKFILL	UNIFIED SOILS CLASSIFICATION (GW, GP, SW, SP) OR SEE BELOW FOR APPROVED BACKFILL OPTIONS
ZONE 3	FINAL COVER OVERTOP	MATERIALS NOT TO EXCEED 120 PCF

APPROVED ZONE 2 BACKFILL OPTIONS	
OPTION	REMARKS
¾" STONE AGGREGATE	THE STONE AGGREGATE SHALL CONSIST OF CLEAN AND FREE DRAINING ANGULAR MATERIAL. THE SIZE OF THIS MATERIAL SHALL HAVE 100% PASSING THE 1" SIEVE WITH 0% TO 5% PASSING THE #8 SIEVE. THIS MATERIAL SHALL BE SEPARATED FROM NATIVE MATERIAL USING GEOFABRIC AROUND THE PERIMETER OF THE BACKFILL (ASTM SIZE #57) AS DETERMINED BY THE GEOTECHNICAL ENGINEER.
SAND	IMPORTED PURE SAND IS PERMITTED TO BE USED AS BACKFILL IF IT IS CLEAN AND FREE DRAINING. THE SAND USED FOR BACKFILLING SHALL HAVE LESS THAN 40% PASSING #40 SIEVE AND LESS THAN 5% PASSING #200 SIEVE. THIS MATERIAL SHALL BE SEPARATED FROM NATIVE MATERIAL USING GEOFABRIC AROUND THE PERIMETER OF THE SAND BACKFILL.
CRUSHED CONCRETE AGGREGATE	CLEAN, FREE DRAINING CRUSHED CONCRETE AGGREGATE MATERIAL CAN BE USED AS BACKFILL FOR STORMTRAP'S MODULES. THE SIZE OF THIS MATERIAL SHALL HAVE 100% PASSING THE 1" SIEVE WITH 0% TO 5% PASSING THE #8 SIEVE. THIS MATERIAL SHALL BE SEPARATED FROM NATIVE MATERIAL USING GEOFABRIC AROUND THE PERIMETER OF THE BACKFILL.
ROAD PACK	STONE AGGREGATE 100% PASSING THE 1-1/2" SIEVE WITH LESS THAN 12% PASSING THE #200 SIEVE (ASTM SIZE #467). GEOFABRIC AS PER GEOTECHNICAL ENGINEER RECOMMENDATION.

FILL DEPTH	TRACK WIDTH	MAX VEHICLE WEIGHT (KIPS)	MAX GROUND PRESSURE
12"	12"	51.8	1690 psf
	18"	56.1	1219 psf
	24"	68.1	1111 psf
	30"	76.7	1000 psf
	36"	85.0	924 psf

NOTE:
TRACK LENGTH NOT TO EXCEED 15'-4".
ONLY TWO TRACKS PER VEHICLE.

STORMTRAP ZONE INSTALLATION SPECIFICATION/PROCEDURE

1. THE FILL PLACED AROUND THE STORMTRAP MODULES MUST BE DEPOSITED ON BOTH SIDES AT THE SAME TIME AND TO APPROXIMATELY THE SAME ELEVATION. AT NO TIME SHALL THE FILL BEHIND ONE SIDE WALL BE MORE THAN 2'-0" HIGHER THAN THE FILL ON THE OPPOSITE SIDE. BACKFILL SHALL EITHER BE COMPACTED AND/OR VIBRATED TO ENSURE THAT BACKFILL AGGREGATE/STONE MATERIAL IS WELL SEATED AND PROPERLY INTER LOCKED. CARE SHALL BE TAKEN TO PREVENT ANY WEDGING ACTION AGAINST THE STRUCTURE, AND ALL SLOPES WITHIN THE AREA TO BE BACKFILLED MUST BE STEPPED OR SERRATED TO PREVENT WEDGING ACTION. CARE SHALL ALSO BE TAKEN AS NOT TO DISRUPT THE JOINT WRAP FROM THE JOINT DURING THE BACKFILL PROCESS. BACKFILL MUST BE FREE-DRAINING MATERIAL. SEE ZONE 2 BACKFILL CHART ON THIS PAGE FOR APPROVED BACKFILL OPTIONS. IF NATIVE EARTH IS SUSCEPTIBLE TO MIGRATION, CONFIRM WITH GEOTECHNICAL ENGINEER AND PROVIDE PROTECTION AS REQUIRED (PROVIDED BY OTHERS). ALL MODULES MUST BE SET AND ALL SIDES MUST BE FULLY BACKFILLED BEFORE TRAVEL OVERTOP THE SYSTEM IS PERMITTED. SEE NOTE 2 FOR EXCEPTIONS AND LIMITATIONS.
2. THE FILL PLACED OVERTOP THE SYSTEM SHALL BE PLACED IN MINIMUM 6" LIFTS. AT NO TIME SHALL MACHINERY OR VEHICLES GREATER THAN THE DESIGN LIVE LOAD LISTED ON SHEET 1.1 TRAVEL OVERTOP THE SYSTEM. IF TRAVEL OVER THE SYSTEM OCCURS BEFORE THE MINIMUM DESIGN COVER IS ACHIEVED, IT MAY BE NECESSARY TO REDUCE THE ULTIMATE LOAD/BURDEN OF THE OPERATING MACHINERY SO AS TO NOT EXCEED THE DESIGN CAPACITY OF THE SYSTEM. VEHICLES AND MACHINERY USED TO PLACE FILL MATERIAL ON TOP OF THE SYSTEM SHALL TRAVEL PARALLEL TO THE LONGITUDINAL AXIS OF THE STORMTRAP MODULES WHENEVER POSSIBLE.
3. THE VIBRATORY FUNCTION OF ANY ROLLER, COMPACTOR, VEHICLE, ETC. SHALL NOT BE USED OVERTOP THE SYSTEM WITHOUT PRIOR APPROVAL FROM STORMTRAP. IN SOME CASES, HAND COMPACTION MAY BE NECESSARY TO ENSURE THAT THE ALLOWABLE DESIGN LOADING IS NOT EXCEEDED.
4. FREE DRAINING ANGULAR AGGREGATE - 80% AGGREGATE RETAINED ON ½" SIEVE MAJORITY OF AGGREGATE SIZE BETWEEN ½" AND 1" ONLY 5% OF MATERIAL PASSING #⅜ SIEVE.
5. FREE DRAINING, NO FINES, 3" ANGULAR AGGREGATE - MAJORITY OF STONE SIZE IN BETWEEN 1½" AND 3" - VERY SIMILAR TO AASHTO (#1, #2, #3, & #24) STONE AGGREGATE GRADATION.
6. CRUSHED CONCRETE AGGREGATE IS KNOWN TO REACT WITH WATER AND CAN INCREASE THE PH VALUE OF THE GROUND WATER. PRIOR TO USING CRUSHED CONCRETE AGGREGATE IN ZONE 1B IT IS IMPERATIVE THAT THE USE OF SUCH MATERIAL SHALL BE VERIFIED BY THE EOR AND/OR THE PROJECT GEOTECHNICAL ENGINEER.

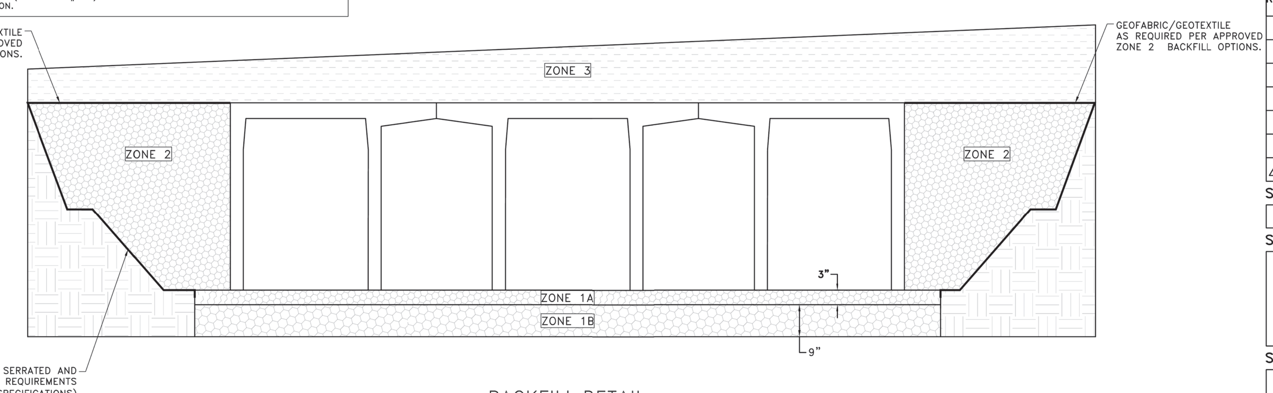

BACKFILL DETAIL

SHEET TITLE: SINGLETRAP BACKFILL SPECIFICATION
SHEET NUMBER: 4.0

ACCESS OPENING SPECIFICATION

1. A TYPICAL ACCESS OPENING FOR THE STORMTRAP SYSTEM ARE 2'-0" IN DIAMETER. ACCESS OPENINGS LARGER THAN 4'-0" IN DIAMETER NEED TO BE APPROVED BY STORMTRAP. ALL OPENINGS MUST RETAIN AT LEAST 2'-0" OF CLEARANCE FROM THE END OF THE STORMTRAP MODULE UNLESS NOTED OTHERWISE. ALL ACCESS OPENINGS TO BE LOCATED ON INSIDE LEG UNLESS OTHERWISE SPECIFIED. SEE SHEET 2.0 FOR SIZES AND LOCATIONS.
2. UNLESS OTHERWISE SPECIFIED, PLASTIC COATED STEPS ARE PROVIDED INSIDE ANY MODULE WHERE DEEMED NECESSARY. THE HIGHEST STEP IN THE MODULE IS TO BE PLACED A DISTANCE OF 1'-0" FROM THE INSIDE EDGE OF THE STORMTRAP MODULES. ALL ENSUING STEPS SHALL BE PLACED AT A DISTANCE BETWEEN 10" MIN AND 14" MAX BETWEEN THEM. STEPS MAY BE MOVED OR ALTERED TO AVOID OPENINGS OR OTHER IRREGULARITIES IN THE MODULE.
3. STORMTRAP LIFTING INSERTS MAY BE RELOCATED TO AVOID INTERFERENCE WITH ACCESS OPENINGS OR THE CENTER OF GRAVITY OF THE MODULE AS NEEDED.
4. STORMTRAP ACCESS OPENINGS MAY BE RELOCATED TO AVOID INTERFERENCE WITH INLET AND/OR OUTLET PIPE OPENINGS SO PLACEMENT OF STEPS IS ATTAINABLE.
5. ACCESS OPENINGS SHOULD BE LOCATED IN ORDER TO MEET THE APPROPRIATE MUNICIPAL REQUIREMENTS. STORMTRAP RECOMMENDS AT LEAST TWO ACCESS OPENINGS PER SYSTEM FOR ACCESS AND INSPECTION.
6. USE PRECAST ADJUSTING RINGS AS NEEDED TO MEET GRADE. STORMTRAP RECOMMENDS FOR COVER OVER 2' TO USE PRECAST BARREL OR CONE SECTIONS. (PROVIDED BY OTHERS)

PIPE OPENING SPECIFICATION

1. MINIMUM EDGE DISTANCE FOR AN OPENING ON THE OUTSIDE WALL SHALL BE NO LESS THAN 1'-0".
2. CONNECTING PIPES MAY BE INSTALLED WITH A 1'-0" CONCRETE COLLAR AND AN AGGREGATE CRADLE (AS REQUIRED) FOR AT LEAST ONE PIPE LENGTH (SEE PIPE CONNECTION DETAIL). A STRUCTURAL GRADE CONCRETE OR HIGH STRENGTH, NON-SHRINK GROUT WITH A MINIMUM 28 DAY COMPRESSIVE STRENGTH OF 3000 PSI MAY BE USED.
3. THE ANNULAR SPACE BETWEEN THE PIPE AND THE HOLE SHALL BE FILLED WITH HIGH STRENGTH NON-SHRINK GROUT.

PIPE INSTALLATION INSTRUCTIONS

1. CLEAN AND LIGHTLY LUBRICATE ALL OF THE PIPE TO BE INSERTED INTO STORMTRAP.
2. IF PIPE IS CUT, CARE SHOULD BE TAKEN TO ALLOW NO SHARP EDGES. BEVEL AND LUBRICATE LEAD END OF PIPE.
3. ALIGN CENTER OF PIPE TO CORRECT ELEVATION AND INSERT INTO OPENING.

NOTE: ALL ANCILLARY PRODUCTS/SPECIFICATIONS RECOMMENDED AND SHOWN ON THIS SHEET INCLUDING BUT NOT LIMITED TO CONCRETE COLLARS, AGGREGATE CRADLES, GRADE RINGS, RISER SECTIONS, ETC., ARE RECOMMENDATIONS ONLY AND SUBJECT TO CHANGE PER THE INSTALLING CONTRACTOR AND/OR PER LOCAL MUNICIPAL CODE/REQUIREMENTS.

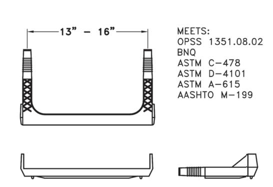

STEP DETAIL

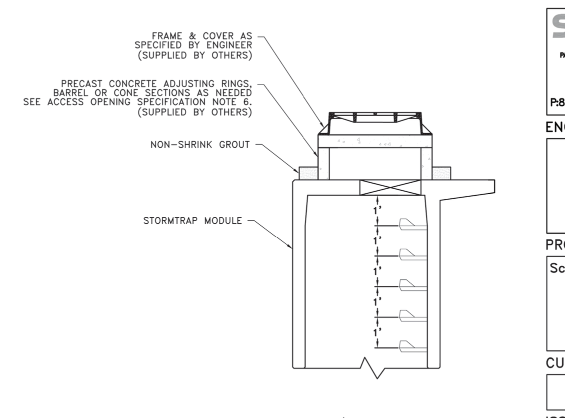

RISER/STAIR DETAIL

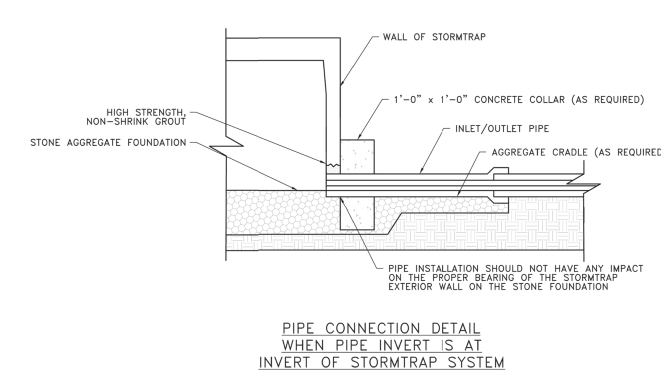

PIPE CONNECTION DETAIL WHEN PIPE INVERT IS AT INVERT OF STORMTRAP SYSTEM

SHEET TITLE: PIPE / ACCESS OPENING SPECIFICATION
SHEET NUMBER: 5.0

GEOWEB AND SPLASH PAD INSTALLATION SPECIFICATION

1. THE APPROVED GEOWEB SHALL BE PRESTO GEOWEB (GW30V3). THE GEOWEB NOMINAL DIMENSIONS SHALL BE 9-FT x 25-FT.
2. THE CONCRETE SPLASH PAD AND GEOWEB SHALL BE INSTALLED PRIOR TO INSTALLATION OF THE STORMTRAP MODULES.
3. THE GEOWEB INFILL MATERIAL SHALL BE #5 AGGREGATE.
4. THE CONCRETE SPLASH PAD SHALL BE INSTALLED WITHIN THE GEOWEB AND IS REQUIRED AT ALL PIPE ENTRY LOCATIONS.
5. THE GEOWEB EDGE SHALL BE INSTALLED 1-FT BEYOND THE OUTER PERIMETER OF THE STORMTRAP SYSTEM.
6. THE GEOWEB LONGITUDINAL DIMENSION (25-FT) SHALL BE INSTALLED PARALLEL TO THE STORMTRAP LEGS.
7. THE CONCRETE SPLASH PAD AND GEOWEB SHALL BE CENTERED AT THE PIPE PENETRATION.
8. REFER TO SPLASH PAD LAYOUT FOR CONCRETE SPLASH PAD DIMENSIONS.
9. IF ANY PRODUCT OTHER THAN PRESTO GEOWEB IS TO BE INSTALLED, THE PRODUCT MANUFACTURER IS REQUIRED TO SUBMIT A LETTER STATING THAT THE PRODUCT IS EQUAL OR BETTER THEN PRESTO GEOWEB, BOTH IN PERFORMANCE AND IN STRUCTURAL CAPACITY.
10. ALL GEOWEB AND SPLASH PADS TO BE SUPPLIED AND INSTALLED BY CONTRACTOR.
11. A CONCRETE SPLASH PAD IS REQUIRED AT ANY ACCESS OPENING THAT HAS AN OPEN GRATE FOR DRAINAGE. THE CONCRETE SPLASH PAD SHALL EXTEND BETWEEN THE UNIT LEG WALLS AND 3'-0" FROM THE CENTERLINE OF THE OPENING ON BOTH SIDES UNLESS SPECIFIED OTHERWISE ON THE SPLASH PAD LAYOUT. GEOWEB IS NOT REQUIRED UNDER ACCESS OPENINGS.

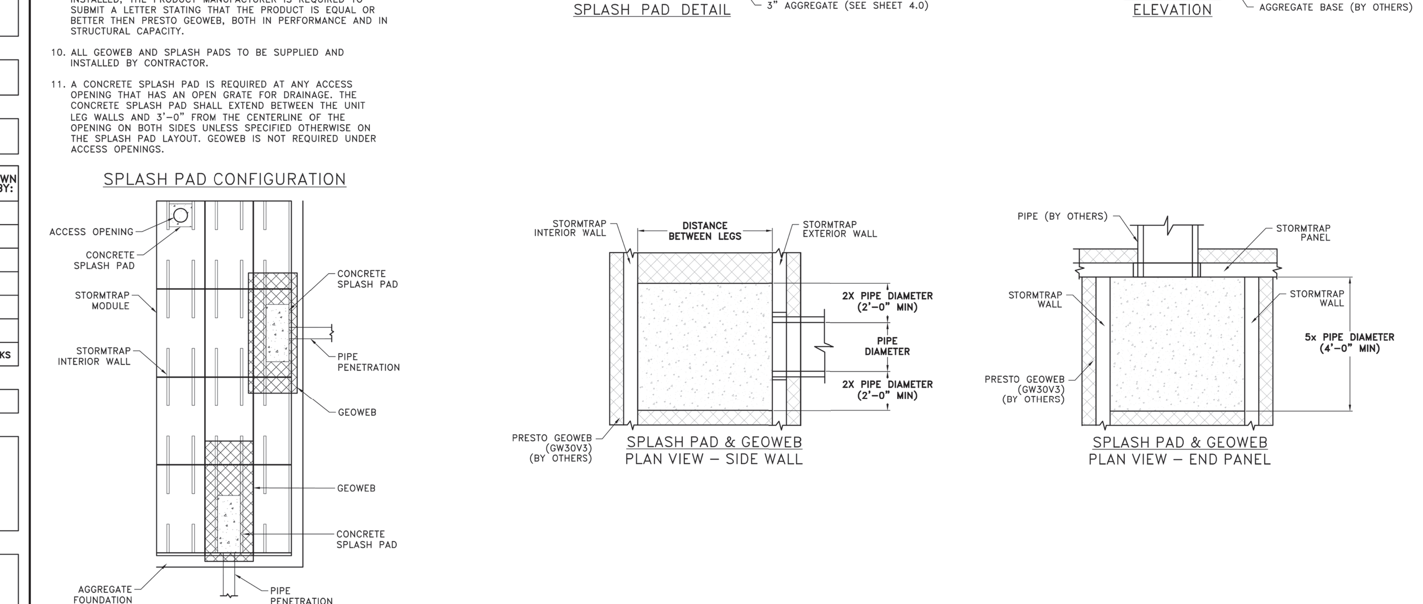

SHEET TITLE: SPLASH PAD & GEOWEB DETAILS
SHEET NUMBER: 6.0

DLA Ltd. ARCHITECTS
www.dla-ltd.com
form follows learning℠
Two Pierce Place | Suite 1300 | Itasca | 60143 | 847.742.4063

SCHOOL TOWN OF MUNSTER
2025 NEW TENNIS FACILITY
MUNSTER HIGH SCHOOL
8823 COLUMBIA AVE. MUNSTER, IN 46321

SCHOOL TOWN of MUNSTER

ADD #1

DATE:	DESCRIPTION:
9/15/25	TOWN SUBMITTAL

ISSUED FOR BID

JAMES GLASCOTT REGISTERED PE12400652 STATE OF INDIANA PROFESSIONAL ENGINEER

WT GROUP JOB NUMBER - C2400072
WT Group Engineering • Design • Consulting
WT GROUP
Structural | Mechanical/Electrical/Plumbing
Civil | Land Survey | Telecommunication| Aquatic
Accessibility Consulting | Design & Program Management
Engineering with Precision, Pace & Passion.
2675 Pratum Avenue | Hoffman Estates, IL 60192
P: 224.293.6333 | F: 224.293.6444
wtengineering.com
©COPYRIGHT 2025 THE W-T GROUP, LLC

PROJECT # 2024.073
DATE: AUGUST 12, 2025
SHEET TITLE: SITE UTILITY DETAILS
SHEET: C-5.2

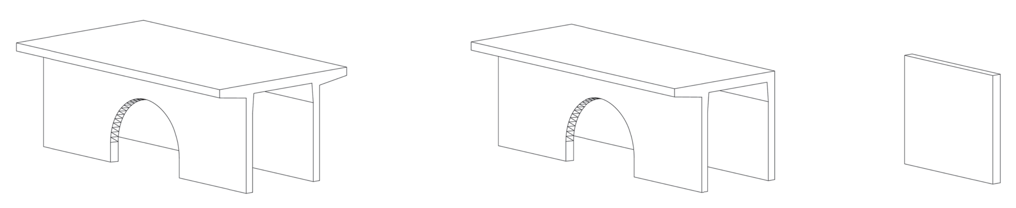

NOTES:
1. OPENING LOCATIONS AND SHAPES MAY VARY.
2. SP – INDICATES A MODULE WITH MODIFICATIONS.
3. P – INDICATES A MODULE WITH A PANEL ATTACHMENT.
4. POCKET WINDOW OPENINGS ARE OPTIONAL.

StormTrap

PATENTS LISTED AT: [HTTP://STORMTRAP.COM/PATENT]

1287 WINDHAM PARKWAY
ROMEOVILLE, IL 60446
P:815-941-4549 / F:331-318-5347

ENGINEER INFORMATION:
WT Group
2675 Pratum Ave
Hoffman Estate, IL
60192
224.293.6333

PROJECT INFORMATION:
School Town of Munster
New Tennis Courts
Munster, IN

CURRENT ISSUE DATE:
07/30/2025

ISSUED FOR:
PRELIMINARY

REV.	DATE:	ISSUED FOR:	DWN BY:
1	07/30/2025	PRELIMINARY	KS

SCALE:
NTS

SHEET TITLE:
SINGLETRAP MODULE TYPES

SHEET NUMBER:
7.0

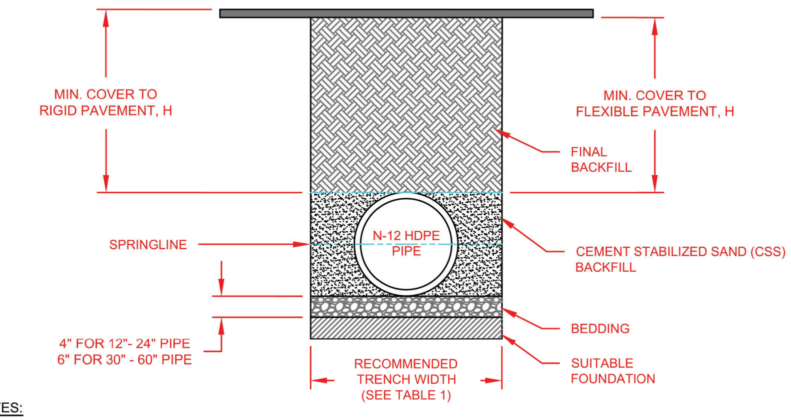

TABLE 1
RECOMMENDED MINIMUM TRENCH WIDTHS

PIPE DIAM.	MIN. TRENCH WIDTH
12" (300mm)	30" (762mm)
15" (375mm)	34" (864mm)
18" (450mm)	39" (991mm)
24" (600mm)	48" (1219mm)
30" (750mm)	56" (1422mm)
36" (900mm)	64" (1626mm)
42" (1050mm)	72" (1829mm)
48" (1200mm)	80" (2032mm)
60" (1500mm)	96" (2438mm)

NOTES:

1. ALL PIPE SYSTEMS SHALL BE INSTALLED IN ACCORDANCE WITH ASTM D2321, "STANDARD PRACTICE FOR UNDERGROUND INSTALLATION OF THERMOPLASTIC PIPE FOR SEWERS AND OTHER GRAVITY FLOW APPLICATIONS", LATEST ADDITION. NATIVE SOILS SHALL BE OF ADEQUATE STIFFNESS TO WITHSTAND A VERTICAL CUT WITHOUT MATERIAL SLOUGHING. DUE TO THE FINAL SET STRENGTH, CEMENT STABILIZED SAND (CSS) SHALL BE COMPACTED TO 85% SPD OR GREATER. SEE NOTES 7 AND 9 REGARDING SET STRENGTH.
2. RECOMMENDED TRENCH WIDTHS ARE LISTED IN TABLE 1 PER ASTM D2321. THESE VALUES ARE BASED ON PROVIDING SUFFICIENT SPACE BETWEEN THE PIPE O.D. AND THE TRENCH WALL, SUCH THAT WORKING ROOM FOR COMPACTION EQUIPMENT IS PROVIDED WITHOUT DAMAGING THE PIPE OR TRENCH WALL INTEGRITY. NARROWER TRENCHES MAY BE POSSIBLE BASED ON THE COMPACTION EQUIPMENT.
3. CSS SHALL HAVE A MIX DESIGN OF ADEQUATE FINAL STRENGTH TO CARRY ALL LIVE AND DEAD LOADING BUT ALLOW FOR ANY FUTURE EXCAVATION. TYPICAL 7 DAY COMPRESSIVE STRENGTHS RANGE BETWEEN 50 AND 100 PSI. MIX DESIGNS CAN VARY BASED ON THE CEMENT, ASH, SOIL, ADMIXTURES, AND WATER RATIO AND SHALL BE DESIGNED AND DEFINED BY THE ENGINEER OF RECORD. THE AMERICAN CONCRETE INSTITUTE (ACI) REPORT ACI 230.1R-09 IS ONE RESOURCE THAT PROVIDES MIX DESIGNS BASED ON DIFFERENT CLASSIFICATIONS OF SOIL.
4. CSS SHOULD NOT BE PLACED WHEN TEMPERATURES ARE BELOW 40°F, AGAINST FROZEN TRENCH MATERIAL OR WHEN APPRECIABLE PRECIPITATION IS FORECASTED DURING PLACEMENT.
5. FOUNDATION: WHERE THE TRENCH BOTTOM IS UNSTABLE, THE CONTRACTOR SHALL EXCAVATE TO A DEPTH REQUIRED BY THE ENGINEER AND REPLACE WITH SUITABLE MATERIAL AS SPECIFIED BY THE ENGINEER. AS AN ALTERNATIVE AND AT THE DISCRETION OF THE DESIGN ENGINEER, THE TRENCH BOTTOM MAY BE STABILIZED USING A GEOTEXTILE MATERIAL.
6. BEDDING: SUITABLE MATERIAL SHALL BE CSS, OR CLASS I OR II PER ASTM D2321. THE CONTRACTOR SHALL PROVIDE DOCUMENTATION FOR MATERIAL SPECIFICATION TO ENGINEER. UNLESS OTHERWISE NOTED BY THE ENGINEER, MINIMUM BEDDING THICKNESS SHALL BE 4" (100mm) FOR 12"-24" DIAMETER PIPE (300mm-600mm); 6" (150mm) FOR 30"-60" (750mm-1500mm) DIAMETER PIPE. THE MIDDLE 1/3 BENEATH THE PIPE INVERT SHALL BE LOOSELY PLACED.
7. FINAL BACKFILL: THE CSS BACKFILL SHALL BE ALLOWED TO CURE AT LEAST 4 HOURS TO REACH AN INITIAL SET STRENGTH PRIOR TO PLACING SOIL ABOVE THE PIPE EMBEDMENT. ADDITIONAL CURE TIME MAY BE REQUIRED BASED ON THE OVERALL FINAL FILL HEIGHT (SEE NOTE 9).
8. MINIMUM COVER: MINIMUM COVER, H, IS 12" (300mm) THROUGH 48" (1200mm) DIAMETER PIPE AND 24" (600mm) OF COVER FOR 60" (1500mm) DIAMETER PIPE, MEASURED FROM TOP OF PIPE TO BOTTOM OF FLEXIBLE PAVEMENT OR TO TOP OF RIGID PAVEMENT.
9. MAXIMUM COVER: MAXIMUM COVER, H, IS BASED ON A MINIMUM 4HR SET TIME OF THE CSS BACKFILL PRIOR TO ANY SOIL PLACEMENT ABOVE THE BACKFILL ENVELOPE. FILL HEIGHTS UP TO 15FT ARE SUITABLE FOR ALL DIAMETERS. LONGER SET TIME MAY ALLOW FOR GREATER FILL HEIGHTS, CONTACT AN ADS REPRESENTATIVE FOR GUIDANCE; SET TIME LESS THAN 4HR MAY RESULT IN HIGHER THAN EXPECTED DEFLECTION AND IMPACT LONG-TERM PERFORMANCE.

REV.	DESCRIPTION	BY	MM/DD/YY	CHK'D
2	INITIAL BACKFILL	JAB	04/02/20	

© 2020 ADS, INC.

ADVANCED DRAINAGE SYSTEMS, INC. ("ADS") HAS PREPARED THIS DETAIL BASED ON INFORMATION PROVIDED TO ADS. THIS DRAWING IS INTENDED TO DEPICT THE COMPONENTS AS REQUESTED. ADS HAS NOT PERFORMED ANY ENGINEERING OR DESIGN SERVICES FOR THIS PROJECT, NOR HAS ADS INDEPENDENTLY VERIFIED THE INFORMATION SUPPLIED. THE INSTALLATION DETAILS PROVIDED HEREIN ARE GENERAL RECOMMENDATIONS AND ARE NOT SPECIFIC FOR THIS PROJECT. THE DESIGN ENGINEER SHALL REVIEW THESE DETAILS PRIOR TO CONSTRUCTION. IT IS THE DESIGN ENGINEERS RESPONSIBILITY TO ENSURE THE DETAILS PROVIDED HEREIN MEETS OR EXCEEDS THE APPLICABLE NATIONAL, STATE, OR LOCAL REQUIREMENTS AND TO ENSURE THAT THE DETAILS PROVIDED HEREIN ARE ACCEPTABLE FOR THIS PROJECT.

N-12 HDPE TRENCH INSTALLATION (CEMENT STABILIZED SAND)
DRAWING NUMBER: STD-101K

ADS Advanced Drainage Systems, Inc.
4640 TRUEMAN BLVD
HILLIARD, OHIO 43026

DRAWN BY: CKM | DATE: 8/14/18 | CHK'D BY: | SCALE: NTS | SHEET: 1 OF 1

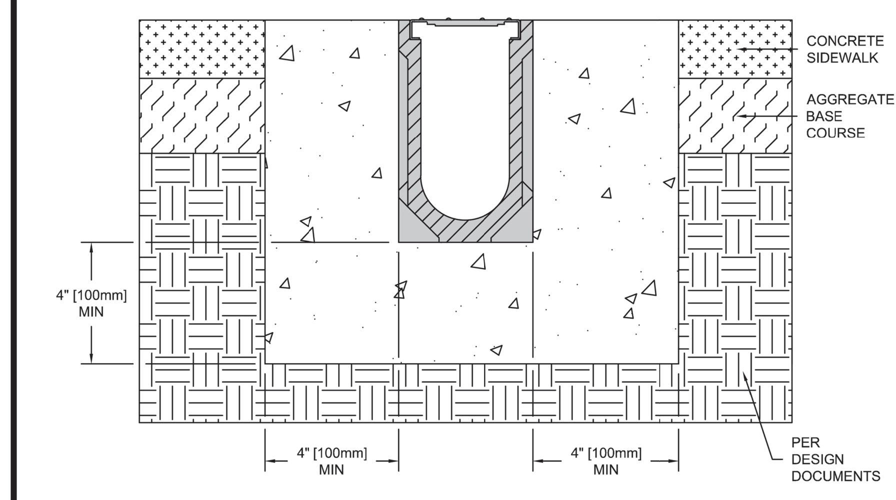

NOTES:
1. IT IS NECESSARY TO ENSURE MINIMUM DIMENSIONS SHOWN ARE SUITABLE FOR EXISTING GROUND CONDITIONS. *ENGINEERING ADVICE MAY BE REQUIRED.*
2. MINIMUM CONCRETE STRENGTH OF 4,000 PSI IS RECOMMENDED. CONCRETE SHOULD BE VIBRATED TO ELIMINATE AIR POCKETS.
3. EXPANSION AND CONTRACTION CONTROL JOINTS AND REINFORCEMENT ARE RECOMMENDED TO PROTECT CHANNEL AND CONCRETE SURROUND. *ENGINEERING ADVICE MAY BE REQUIRED.*
4. REFER TO ACO'S LATEST INSTALLATION INSTRUCTIONS FOR FURTHER DETAILS.

SPECIFICATION CLAUSE

SPORT 4000

GENERAL
THE SURFACE DRAINAGE SYSTEM SHALL BE POLYMER CONCRETE SYSTEM 4000 CHANNEL SYSTEM AS MANUFACTURED BY ACO POLYMER PRODUCTS, INC.

MATERIALS
CHANNELS SHALL BE MANUFACTURED FROM POLYESTER RESIN POLYMER CONCRETE. MINIMUM PROPERTIES OF POLYMER CONCRETE WILL BE AS FOLLOWS:

COMPRESSIVE STRENGTH:	14,000 PSI
FLEXURAL STRENGTH:	4,000 PSI
TENSILE STRENGTH:	1,500 PSI
WATER ABSORPTION:	0.07%
FROST PROOF	YES
DILUTE ACID AND ALKALI RESISTANT	YES
B117 SALT SPRAY TEST COMPLIANT	YES

THE SYSTEM SHALL BE 4" (100mm) NOMINAL INTERNAL WIDTH AND A 6.1" (155mm) OVERALL WIDTH. ALL CHANNELS SHALL BE INTERLOCKING WITH A MALE/FEMALE JOINT.

4002 CHANNEL : INVERT DEPTH - 4.65"
4010 CHANNEL : INVERT DEPTH - 6.54"
4020 CHANNEL : INVERT DEPTH - 8.90"
4030 CHANNEL : INVERT DEPTH - 11.26"

STANDARD ACO DRAIN GRATES AND LOCKING DEVICES ARE USED, SEE SEPARATE SPECIFICATION SHEETS FOR INFORMATION.

THE COMPLETE DRAINAGE SYSTEM SHALL BE BY ACO POLYMER PRODUCTS, INC. ANY DEVIATION OR PARTIAL SYSTEM DESIGN AND/OR IMPROPER INSTALLATION WILL VOID ANY AND ALL WARRANTIES PROVIDED BY ACO POLYMER PRODUCTS, INC.

THE SYSTEM SHALL BE INSTALLED IN ACCORDANCE WITH THE MANUFACTURER'S INSTRUCTIONS AND RECOMMENDATIONS.
REFER TO ARCHITECT'S PLANS FOR TRENCH AND CATCH BASIN LOCATION.

S4000-FECTS
DATE: 12/04/13

SYSTEM 4000:
INSTALLATION DRAWING - ACO SPORT

ACO Polymer Products, Inc.

825 W. Beechcraft St Casa Grande, AZ 85122 Tel: 520-421-9988 Fax: 520-421-9899	P.O. Box 245 Chardon, OH 44024 Tel: 440-285-7000 Fax: 440-285-8517	4211 Pleasant Rd. Fort Mill, SC 29708 Tel: 800-543-4764 Fax: 803-802-1063

Arizona Tel: 888-490-9552 e-mail: sales@acousa.com Ohio Tel: 800-543-4764 www.acousa.com South Carolina Tel: 800-622-2377

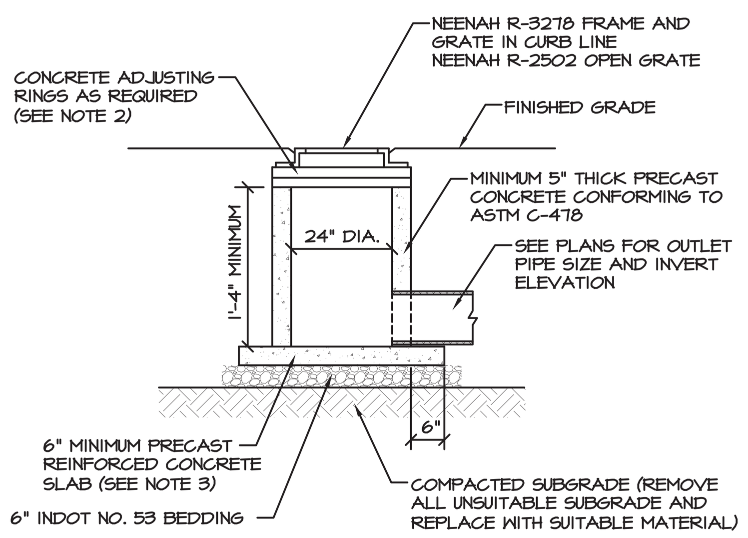

NOTES:

1. PRECAST REINFORCED CONCRETE ADJUSTING RINGS SHALL CONFORM TO ASTM C-39 (COMPRESSIVE STRENGTH TEST).
2. MAXIMUM OF TWO CONCRETE ADJUSTING RINGS ARE ALLOWED AND THE TOTAL ADJUSTMENT HEIGHT SHALL NOT EXCEED 8".
3. PRECAST REINFORCED MONOLITHIC CONCRETE MANHOLE BOTTOM WITH INTEGRAL SIDEWALLS CAN BE SUBSTITUTED IN PLACE OF THE CONCRETE BOTTOM SLAB DESIGN SHOWN.
4. SEE PLANS FOR INLET RIM ELEVATIONS AND PIPE INVERT ELEVATIONS AND LOCATIONS.

DETAIL - INLET
NOT TO SCALE

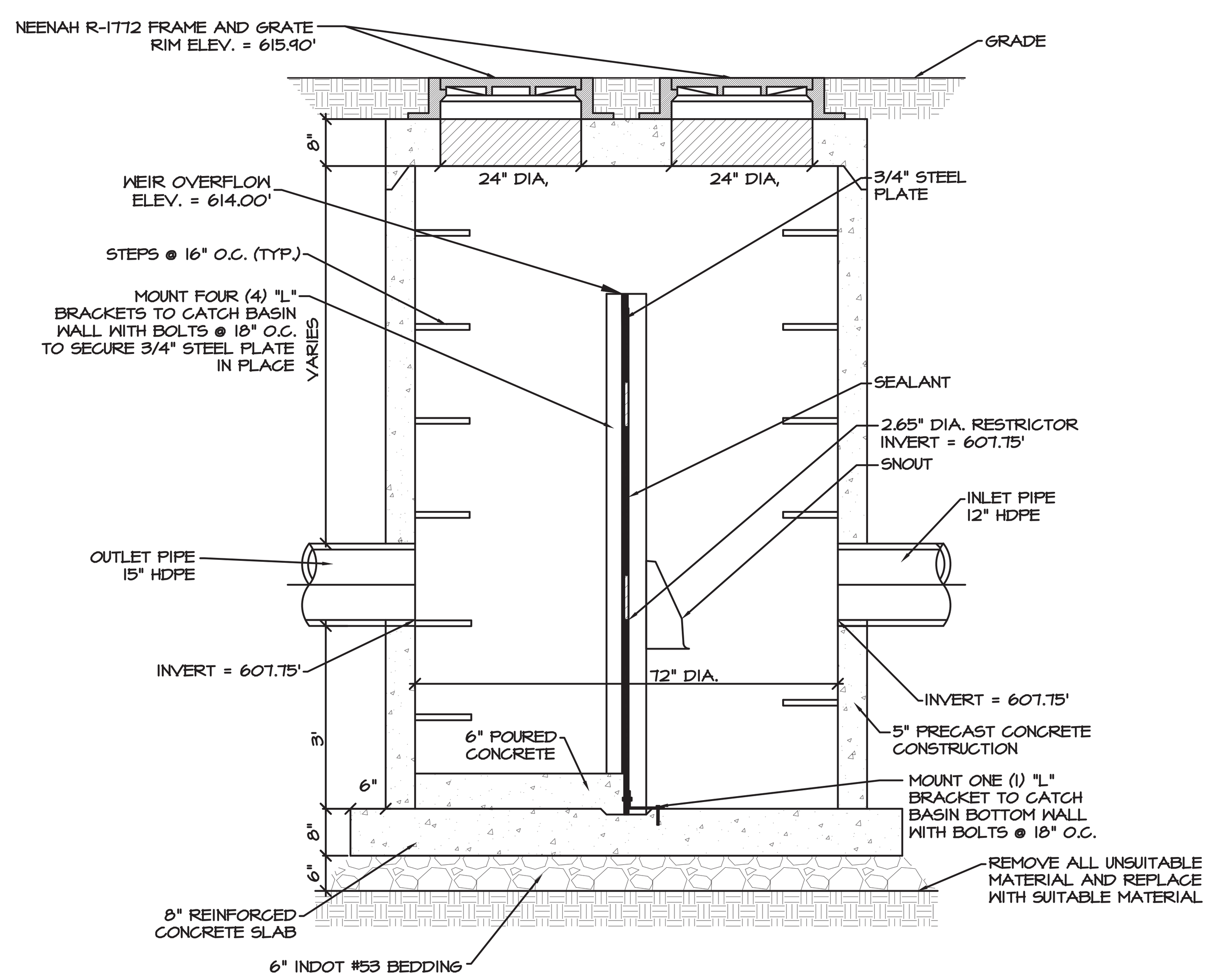

DETAIL - 72" CATCH BASIN WITH RESTRICTOR (STRUCTURE #7)
NOT TO SCALE

ADD #1

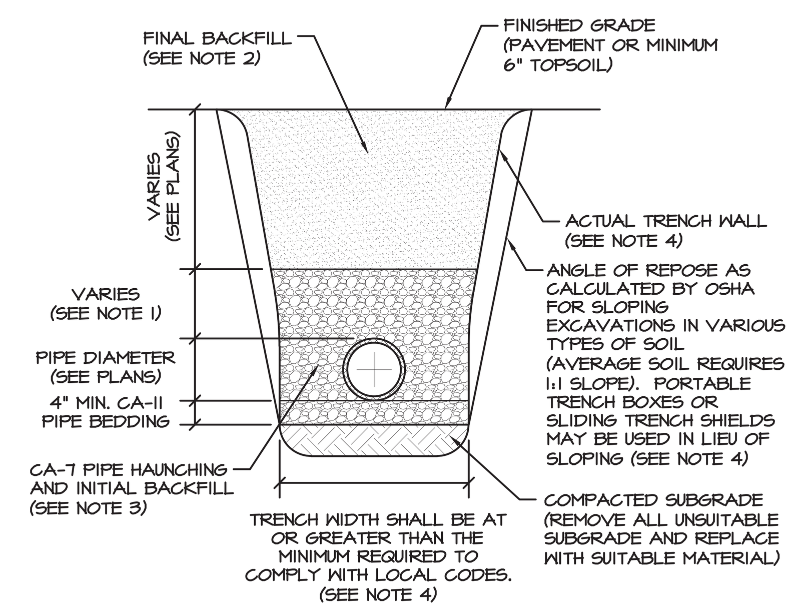

NOTES:

1. 12" MINIMUM CA-7 INITIAL BACKFILL REQUIRED FOR PIPES UP TO AND INCLUDING 48" IN DIAMETER. 18" MINIMUM CA-7 INITIAL BACKFILL REQUIRED FOR PIPES GREATER THAN 48" IN DIAMETER.
2. BACKFILL TRENCH WITH INORGANIC EXCAVATED MATERIAL EXCEPT WHERE UNDER OR WITHIN 2' OF PAVEMENT WHERE CA-6 GRANULAR MATERIAL IS REQUIRED.
3. ALL BACKFILL MATERIALS SHALL BE PROPERLY COMPACTED ACCORDING TO THE "STANDARD SPECIFICATIONS FOR SEWER AND WATER CONSTRUCTION IN ILLINOIS," SECTION 20-4.06.
4. ALL TRENCH EXCAVATIONS SHALL BE PROTECTED IN ACCORDANCE WITH APPLICABLE FEDERAL, STATE, AND LOCAL REGULATIONS, LAWS AND RULES. AT A MINIMUM, THEY SHALL NOT BE LESS THAN THE STANDARDS AND REGULATIONS ESTABLISHED BY OSHA IN 29 CFR PART 1926.

DETAIL - FLEXIBLE PIPE TRENCH
NOT TO SCALE

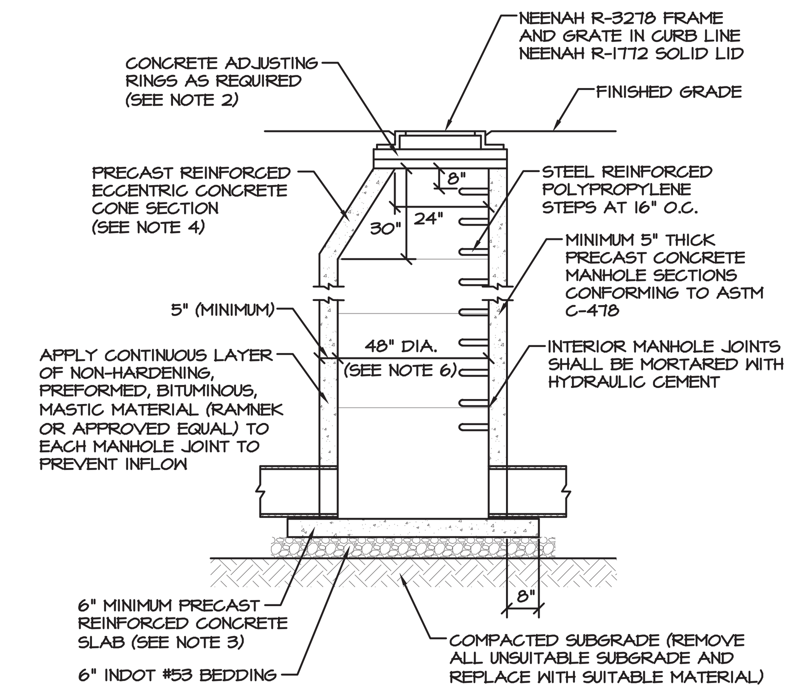

NOTES:

1. PRECAST REINFORCED CONCRETE CONE SECTION AND ADJUSTING RINGS SHALL CONFORM TO ASTM C-39 (COMPRESSIVE STRENGTH TEST).
2. MAXIMUM ALLOWABLE HEIGHT FOR CONCRETE ADJUSTING RINGS SHALL BE 8".
3. PRECAST REINFORCED MONOLITHIC CONCRETE MANHOLE BOTTOM WITH INTEGRAL SIDEWALLS CAN BE SUBSTITUTED IN PLACE OF THE CONCRETE BOTTOM SLAB DESIGN SHOWN.
4. FLAT-TOP SLABS SHALL BE PROVIDED FOR SHALLOW MANHOLE INSTALLATIONS ONLY AND SHALL BE DESIGNED FOR HS-20 TRAFFIC LOADING WHEN LOCATED IN PAVED AREAS.
5. MANHOLE BARREL SECTIONS SHALL BE TONGUE AND GROOVE TYPE.
6. MANHOLE WALL THICKNESSES AND CONE SECTION HEIGHT DIMENSIONS SHOWN ARE THE MINIMUM REQUIRED FOR 48" DIA. PRECAST REINFORCED CONCRETE STORM MANHOLES.
7. SEE PLANS FOR MANHOLE DIAMETER SIZES, RIM ELEVATIONS AND PIPE INVERT ELEVATIONS AND LOCATIONS.

DETAIL - STORM MANHOLE
NOT TO SCALE

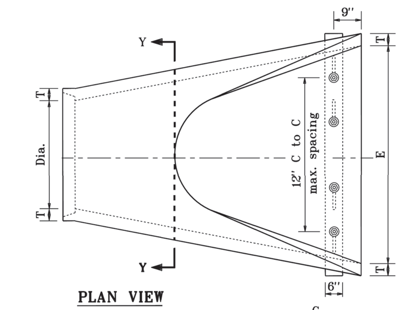

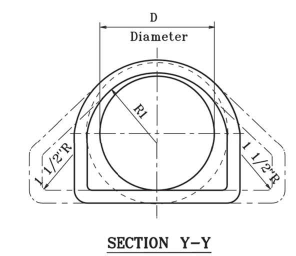

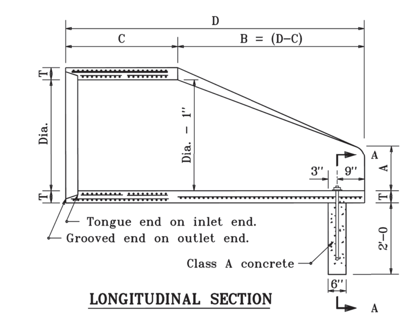

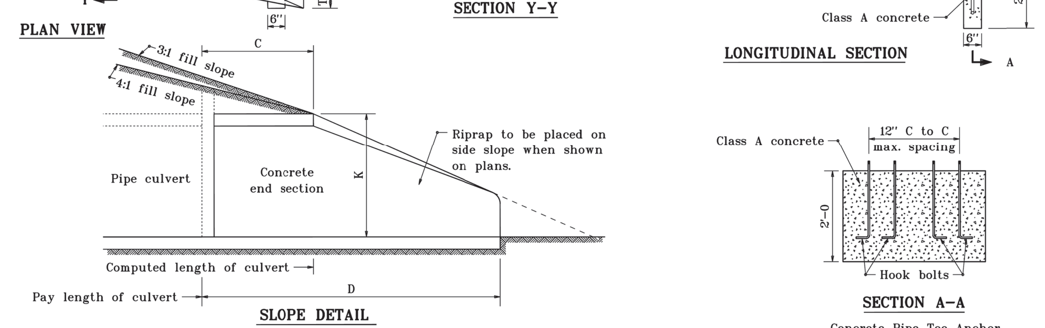

TABLE OF DIMENSIONS

DIA.	T (min.)	A (±1")	C (±1")	D (±1")	E (±1")	K	R1	R2	APPROX. WEIGHT, lb.
12"	2"	5"	4'-3	6'-2	2'-0	1.3	10⅛"	9"	800
15"	2¼"	7"	4'-0	6'-3	2'-6	1.5	12½"	11"	1100
18"	2½"	11"	4'-1	6'-2	3'-0	1.8	15½"	12"	1300
21"	2¾"	11"	3'-6	6'-3	3'-6	2.1	16⅛"	13"	1500
24"	3"	1'-0	2'-8	6'-3	4'-0	2.3	16¾"	14"	1800
27"	3¼"	1'-1	2'-5	6'-3	4'-6	2.6	18⅞"	14½"	2100
30"	3½"	1'-2	1'-10	6'-3	5'-0	2.9	18½"	15"	2400
33"	3¾"	1'-3	3'-6	8'-3	5'-6	3.1	23¾"	17½"	4100
36"	4"	1'-5	3'-1	8'-3	6'-0	3.4	24⅝"	20"	4200

INDIANA DEPARTMENT OF TRANSPORTATION
PRECAST CONCRETE END SECTION
MAY 1998
STANDARD DRAWING NO. E 715-PCES-01

DETAILS PLACED IN THIS FORMAT 11-15-99
/s/ Anthony L. Uremovich 11-15-99
DESIGN STANDARDS ENGINEER DATE
/s/ Firooz Zandi 11-15-99
CHIEF HIGHWAY ENGINEER DATE
ORIGINALLY APPROVED 5-01-98

ANTHONY L. UREMOVICH REGISTERED No. 18095 STATE OF INDIANA PROFESSIONAL ENGINEER
DESIGN STANDARDS ENGINEER

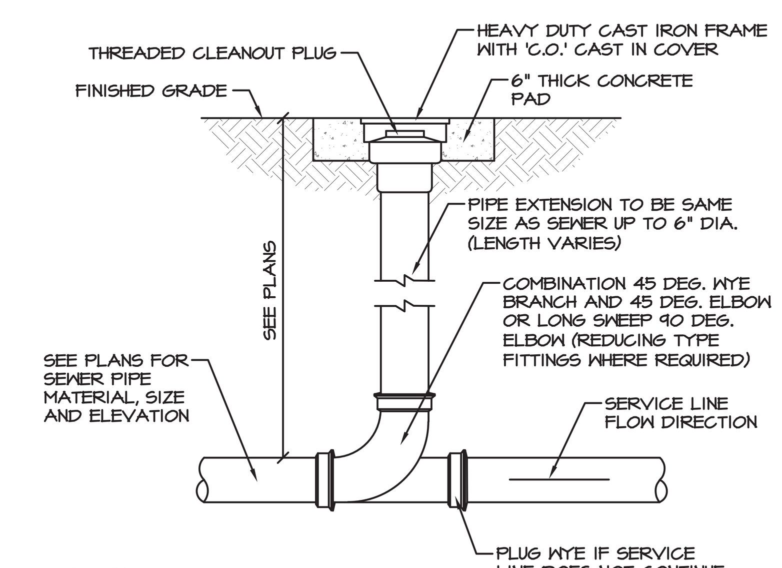

NOTES:

1. SEE APPLICABLE DETAIL FOR BEDDING AND BACKFILL REQUIREMENTS.

DETAIL - CLEAN OUT
NOT TO SCALE

DLA Ltd. ARCHITECTS
form follows learning℠
Two Pierce Place | Suite 1300 | Itasca | 60143 | 847.742.4063 www.dla-ltd.com

SCHOOL TOWN OF MUNSTER
2025 NEW TENNIS FACILITY
MUNSTER HIGH SCHOOL
8823 COLUMBIA AVE. MUNSTER, IN 46321

DATE:	DESCRIPTION:
9/15/25	TOWN SUBMITTAL

ISSUED FOR BID

JAMES GLASCOTT REGISTERED PE12400652 STATE OF INDIANA PROFESSIONAL ENGINEER

WT GROUP JOB NUMBER - C2400072
WT Group Engineering • Design • Consulting
WT GROUP
Structural | Mechanical/Electrical/Plumbing
Civil | Land Survey | Telecommunication| Aquatic
Accessibility Consulting | Design & Program Management
Engineering with Precision, Pace & Passion.
2675 Pratum Avenue | Hoffman Estates, IL 60192
P: 224.293.6333 | F: 224.293.6444
wtengineering.com
©COPYRIGHT 2025 THE W-T GROUP, LLC

PROJECT #: 2024.073
DATE: AUGUST 12, 2025
SHEET TITLE: SITE UTILITY DETAILS
SHEET: C-5.3

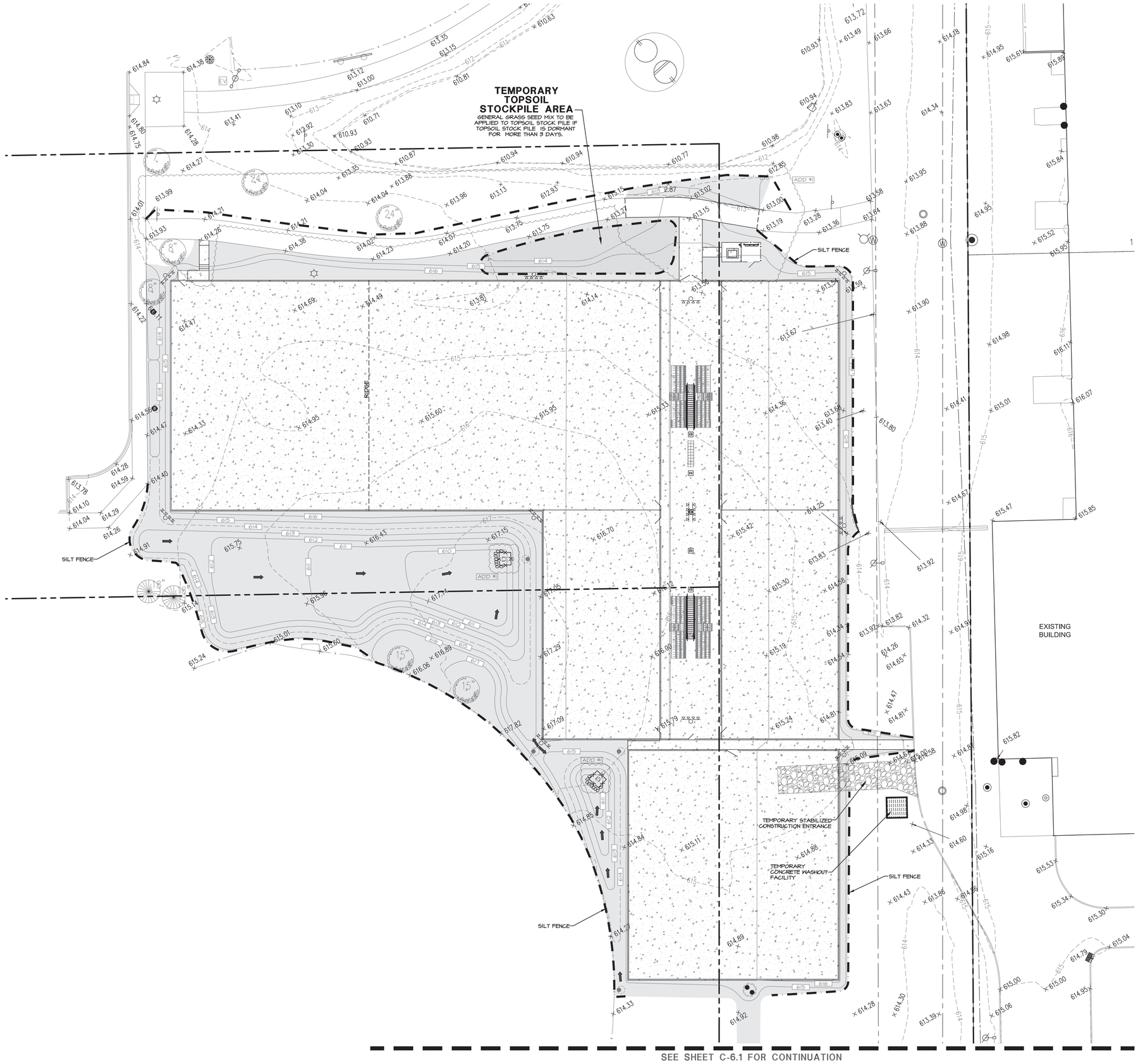

SWPPP NOTES:

A. ALL DISTURBED GREEN SPACES ON THE SITE SHALL BE RESTORED ACCORDING TO THE SEED BED PREPARATION SPECIFICATIONS BELOW AND BLANKETED OR MATTED AS SHOWN ON THE PLANS.
B. TEMPORARY OR PERMANENT STABILIZATION SHALL OCCUR IMMEDIATELY WHENEVER EARTH DISTURBING ACTIVITIES HAVE PERMANENTLY OR TEMPORARILY CEASED ON ANY PORTION OF THE SITE. TEMPORARY STABILIZATION SHALL CONSIST OF THE INSTALLATION OF TEMPORARY SEEDING.
C. CONTRACTOR TO INSTALL TEMPORARY CONSTRUCTION ENTRANCES AS NECESSARY TO EXCAVATE AREAS AND HAUL SOILS ON-SITE. TRACKING OF DEBRIS ON SITE WILL NOT BE TOLERATED. ANY DEBRIS LEFT OUTSIDE OF THE PROJECT LIMITS MUST BE CLEANED IMMEDIATELY.
D. EROSION CONTROL BLANKETS AND TURF REINFORCEMENT MATS SHALL BE INSTALLED USING 6" BIO-STAKES AS MANUFACTURED BY NORTH AMERICAN GREEN. METAL STAKES AND STAPLES ARE PROHIBITED.
E. CONTRACTOR SHALL PROVIDE ALL NECESSARY MAINTENANCE FOR THE SEDIMENT AND EROSION CONTROL MEASURES FOR THE DURATION OF THE PROJECT.
F. CONTRACTOR SHALL BE RESPONSIBLE FOR PROVIDING ALL STORMWATER POLLUTION PREVENTION PLAN (SWPPP) INSPECTIONS, INSPECTION REPORTS, CORRECTIVE ACTION FORMS, SWPPP AMENDMENT LOGS, SUBCONTRACTOR CERTIFICATIONS/AGREEMENTS, GRADING AND STABILIZATION ACTIVITIES LOGS, SWPPP TRAINING LOGS, AND DELEGATION OF AUTHORITY FORMS FOR THE DURATION OF THE PROJECT.
G. CONTRACTOR SHALL PROVIDE COPIES OF ALL SWPPP REPORTS, FORMS, AND LOGS TO THE INT GROUP ONCE THE SITE HAS BEEN STABILIZED. THE CONTRACTOR SHALL MAINTAIN THESE DOCUMENTS FOR A PERIOD OF 3 YEARS FROM THE FINAL STABILIZATION OF THE SITE.
H. FOLLOWING THE REMOVAL OF THE SILT FENCE, THE CONTRACTOR SHALL RESTORE THE THE SILT FENCE TRENCH WITH SOD.
I. CONTRACTOR SHALL INITIATE STABILIZATION OF ALL DISTURBED AREAS WITHIN ONE CALENDAR DAY.
J. CONTRACTOR SHALL PROVIDE AND IMPLEMENT DEWATERING PLAN IN ACCORDANCE WITH THE GEOTECHNICAL REPORT DATED 04-10-2024 PREPARED BY GEOGON PROFESSIONAL SERVICES, LLC.
K. SEED BED PREPARATION:
K.A. ALL STONES, ROCKS, DEBRIS LARGER THAN 1" IN DIAMETER SHALL BE REMOVED.
K.B. DISK OR TILL TOPSOIL TO A DEPTH OF 3" AND REDUCE ALL SOIL PARTICLES TO NO LARGER THAN 2". THE SURFACE SHALL BE FREE OF WEEDS, STONES, ROCKS, STICKS, GULLIES, CLODS, AND DEBRIS.
K.C. THE AREA SHALL BE FINE GRADED.
K.D. THE SEED SHALL BE PLACED INTO THE SOIL WITH A MACHINE THAT MECHANICALLY PLACES THE SEED IN DIRECT CONTACT WITH THE SOIL AND COVERS THE SEED WITH THE SOIL.
K.E. BROADCAST AND HYDROSEED WILL NOT BE ALLOWED.
K.F. SEEDED AREAS SHALL BE COVERED WITH THE EROSION BLANKET RIGHT AFTER THE SEED HAS BEEN SOWN.
K.G. ANY SOIL AMENDMENTS NEEDED TO ACHIEVE A 90% HEALTHY STAND OF VEGETATION WILL BE ADDED TO THE SOIL AT NO EXTRA CHARGE TO THE OWNER. THE STAND OF VEGETATION WILL NEED TO BE ACCEPTED BY THE ENGINEER.
K.H. THE SEED MIX SHALL BE KENTUCKY BLUEGRASS 100LBS/ACRE, REVENGE PERENNIAL RYEGRASS 60 LBS/ACRE, ANNUAL RYE 40 LBS/ACRE AND CREEPING RED FESCUE 40 LBS/ACRE TOTAL.

SWPPP LEGEND

- EXISTING SPOT GRADE
- EXISTING CONTOUR LINE
- PROPOSED CONTOUR LINE
- OVERLAND FLOW ARROW
- 100 YEAR OVERLAND FLOW ROUTE
- EXISTING CATCH BASIN / INLET
- EXISTING BEEHIVE CATCH BASIN
- EXISTING MANHOLE
- PROPOSED INLET
- SILT FENCE
- FLEXSTORM CATCH-IT INLET PROTECTION
- FINE GRADE, FERTILIZE, AND SEED. INSTALL DS75 EROSION CONTROL BLANKET WITH 6" BIO-STAKES AS MANUFACTURED BY NORTH AMERICAN GREEN. FOLLOW MANUFACTURER'S INSTALLATION INSTRUCTIONS.
- TEMPORARY CONCRETE WASHOUT FACILITY
- SILT FENCE INLET PROTECTION WITH STONE COLLAR

NORTH

1" = 20'

00 10 20 40 80

JAMES GLASCOTT REGISTERED PE12400652 STATE OF INDIANA PROFESSIONAL ENGINEER

WT GROUP JOB NUMBER - C2400072

WT Group
Engineering • Design • Consulting

WT GROUP
Structural | Mechanical/Electrical/Plumbing
Civil | Land Survey | Telecommunication| Aquatic
Accessibility Consulting | Design & Program Management
Engineering with Precision, Pace & Passion.
2675 Prairie Avenue | Hoffman Estates, IL 60192
P: 224.293.6333 | F : 224.293.6444
wtengineering.com

© COPYRIGHT 2025 THE WT GROUP, LLC

DLA ARCHITECTS LLC
www.dla-ltd.com
form follows learning™
Two Pierce Place | Suite 1300 | Itasca | 60143 | 847.742.4063

SCHOOL TOWN OF MUNSTER
2025 NEW TENNIS FACILITY
MUNSTER HIGH SCHOOL
8823 COLUMBIA AVE. MUNSTER, IN 46321

SCHOOL TOWN OF MUNSTER

DATE:	DESCRIPTION
9/15/25	TOWN SUBMITTAL

ISSUED FOR BID

PROJECT # 2024.073
DATE: AUGUST 12, 2025
SHEET TITLE:
STORMWATER POLLUTION PREVENTION PLAN
SHEET:
C-6.0

SEE SHEET C-6.0 FOR CONTINUATION

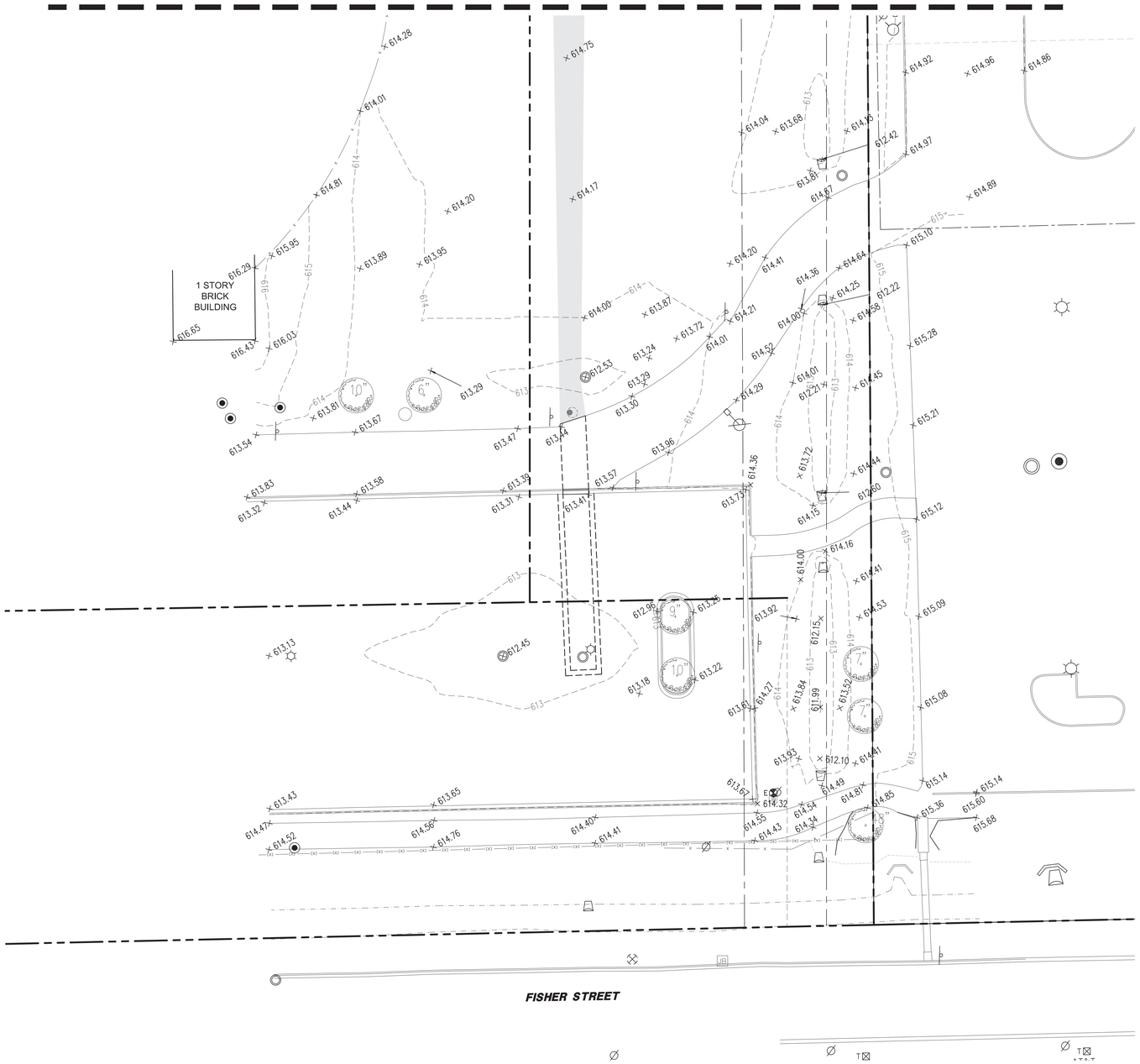

SWPPP NOTES:

A. ALL DISTURBED GREEN SPACES ON THE SITE SHALL BE RESTORED ACCORDING TO THE SEED BED PREPARATION SPECIFICATIONS BELOW AND BLANKETED OR MATTED AS SHOWN ON THE PLANS.
B. TEMPORARY OR PERMANENT STABILIZATION SHALL OCCUR IMMEDIATELY WHENEVER EARTH DISTURBING ACTIVITIES HAVE PERMANENTLY OR TEMPORARILY CEASED ON ANY PORTION OF THE SITE. TEMPORARY STABILIZATION SHALL CONSIST OF THE INSTALLATION OF TEMPORARY SEEDING.
C. CONTRACTOR TO INSTALL TEMPORARY CONSTRUCTION ENTRANCES AS NECESSARY TO EXCAVATE AREAS AND HAUL SOILS ON-SITE. TRACKING OF DEBRIS ON SITE WILL NOT BE TOLERATED. ANY DEBRIS LEFT OUTSIDE OF THE PROJECT LIMITS MUST BE CLEANED IMMEDIATELY.
D. EROSION CONTROL BLANKETS AND TURF REINFORCEMENT MATS SHALL BE INSTALLED USING 6" BIO-STAKES AS MANUFACTURED BY NORTH AMERICAN GREEN. METAL STAKES AND STAPLES ARE PROHIBITED.
E. CONTRACTOR SHALL PROVIDE ALL NECESSARY MAINTENANCE FOR THE SEDIMENT AND EROSION CONTROL MEASURES FOR THE DURATION OF THE PROJECT.
F. CONTRACTOR SHALL BE RESPONSIBLE FOR PROVIDING ALL STORMWATER POLLUTION PREVENTION PLAN (SWPPP) INSPECTIONS, INSPECTION REPORTS, CORRECTIVE ACTION FORMS, SWPPP AMENDMENT LOGS, SUBCONTRACTOR CERTIFICATIONS/AGREEMENTS, GRADING AND STABILIZATION ACTIVITIES LOGS, SWPPP TRAINING LOGS, AND DELEGATION OF AUTHORITY FORMS FOR THE DURATION OF THE PROJECT.
G. CONTRACTOR SHALL PROVIDE COPIES OF ALL SWPPP REPORTS, FORMS, AND LOGS TO THE HT GROUP ONCE THE SITE HAS BEEN STABILIZED. THE CONTRACTOR SHALL MAINTAIN THESE DOCUMENTS FOR A PERIOD OF 3 YEARS FROM THE FINAL STABILIZATION OF THE SITE.
H. FOLLOWING THE REMOVAL OF THE SILT FENCE, THE CONTRACTOR SHALL RESTORE THE THE SILT FENCE TRENCH WITH SOD.
I. CONTRACTOR SHALL INITIATE STABILIZATION OF ALL DISTURBED AREAS WITHIN ONE CALENDAR DAY.
J. CONTRACTOR SHALL PROVIDE AND IMPLEMENT DEWATERING PLAN IN ACCORDANCE WITH THE GEOTECHNICAL REPORT DATED 09-10-2024 PREPARED BY GEOGON PROFESSIONAL SERVICES, LLC.
K. SEED BED PREPARATION:
K.A. ALL STONES, ROCKS, DEBRIS LARGER THAN 1" IN DIAMETER SHALL BE REMOVED.
K.B. DISK OR TILL TOPSOIL TO A DEPTH OF 3" AND REDUCE ALL SOIL PARTICLES TO NO LARGER THAN 2". THE SURFACE SHALL BE FREE OF WEEDS, STONES, ROCKS, STICKS, GULLIES, CLODS, AND DEBRIS.
K.C. THE AREA SHALL BE FINE GRADED.
K.D. THE SEED SHALL BE PLACED INTO THE SOIL WITH A MACHINE THAT MECHANICALLY PLACES THE SEED IN DIRECT CONTACT WITH THE SOIL AND COVERS THE SEED WITH THE SOIL.
K.E. BROADCAST AND HYDROSEED WILL NOT BE ALLOWED.
K.F. SEEDED AREAS SHALL BE COVERED WITH THE EROSION BLANKET RIGHT AFTER THE SEED HAS BEEN SOWN.
K.G. ANY SOIL AMENDMENTS NEEDED TO ACHIEVE A 90% HEALTHY STAND OF VEGETATION WILL BE ADDED TO THE SOIL AT NO EXTRA CHARGE TO THE OWNER. THE STAND OF VEGETATION WILL NEED TO BE ACCEPTED BY THE ENGINEER.
K.H. THE SEED MIX SHALL BE KENTUCKY BLUEGRASS 100LBS/ACRE, REVENSE PERENNIAL RYEGRASS 60 LBS/ACRE, ANNUAL RYE 40 LBS/ACRE AND CREEPING RED FESCUE 40 LBS/ACRE TOTAL.

SWPPP LEGEND

- EXISTING SPOT GRADE
- EXISTING CONTOUR LINE
- PROPOSED CONTOUR LINE
- OVERLAND FLOW ARROW
- 100 YEAR OVERLAND FLOW ROUTE
- EXISTING CATCH BASIN / INLET
- EXISTING BEEHIVE CATCH BASIN
- EXISTING MANHOLE
- PROPOSED INLET
- SILT FENCE
- FLEXSTORM CATCH-IT INLET PROTECTION
- FINE GRADE, FERTILIZE, AND SEED. INSTALL DS75 EROSION CONTROL BLANKET WITH 6" BIO-STAKES AS MANUFACTURED BY NORTH AMERICAN GREEN. FOLLOW MANUFACTURER'S INSTALLATION INSTRUCTIONS.
- TEMPORARY CONCRETE WASHOUT FACILITY
- SILT FENCE INLET PROTECTION WITH STONE COLLAR

NORTH

1" = 20'

00 10 20 40 80

JAMES GLASCOTT
REGISTERED
PE12400652
STATE OF INDIANA
PROFESSIONAL ENGINEER

WT GROUP JOB NUMBER - C2400072

WT Group
Engineering • Design • Consulting

WT GROUP
Structural | Mechanical|Electrical|Plumbing
Civil | Land Survey | Telecommunication| Aquatic
Accessibility Consulting | Design & Program Management
Engineering with Precision, Pace & Passion.
2675 Prairie Avenue | Hoffman Estates, IL 60192
P: 224.293.6333 | F: 224.293.6444
wtengineering.com

© COPYRIGHT 2025 THE WT GROUP, LLC

DLA ARCHITECTS
www.dla-ltd.com
form follows learning
Two Pierce Place | Suite 1300 | Itasca | 60143 | 847.742.4063

SCHOOL TOWN OF MUNSTER
2025 NEW TENNIS FACILITY
MUNSTER HIGH SCHOOL
8823 COLUMBIA AVE. MUNSTER, IN 46321

SCHOOL TOWN MUNSTER

DATE:	DESCRIPTION:
9/15/25	TOWN SUBMITTAL

ISSUED FOR BID

PROJECT # 2024.073
DATE: AUGUST 12, 2025
SHEET TITLE: STORMWATER POLLUTION PREVENTION PLAN
SHEET: C-6.1

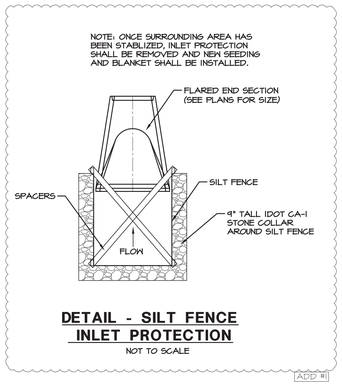

DETAIL - SILT FENCE INLET PROTECTION

NOT TO SCALE

Practice Standards and Specifications

6.06

TEMPORARY GRAVEL CONSTRUCTION ENTRANCE/EXIT

Definition A graveled area or pad located at points where vehicles enter and leave a construction site.

Purpose To provide a buffer area where vehicles can drop their mud and sediment to avoid transporting it onto public roads, to control erosion from surface runoff, and to help control dust.

Conditions Where Practice Applies Wherever traffic will be leaving a construction site and moving directly onto a public road or other paved off-site area. Construction plans should limit traffic to properly constructed entrances.

Design Criteria **Aggregate Size**—Use 2-3 inch washed stone.

Dimensions of gravel pad—
Thickness: 6 inches minimum
Width: 12-feet minimum or full width at all points of the vehicular entrance and exit area, whichever is greater
Length: 50-feet minimum

Location—Locate construction entrances and exits to limit sediment from leaving the site and to provide for maximum utility by all construction vehicles (Figure 6.06a). Avoid steep grades, and entrances at curves in public roads.

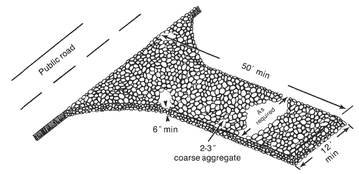

Figure 6.06a Gravel entrance/exit keeps sediment from leaving the construction site (modified from Va SWCC).

TEMPORARY CONSTRUCTION ENTRANCE

NOT TO SCALE

WORKSHEET

Concrete Washout (Above Grade System) Worksheet

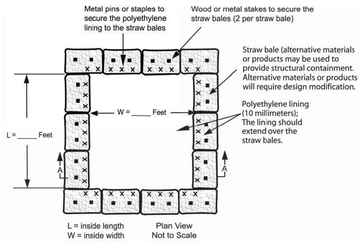

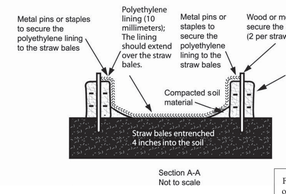

For information on this measure, see Chapter 7, page 247

TEMPORARY WASHOUT AREA

NOT TO SCALE

FLEXSTORM INLET FILTERS PRODUCT SELECTION AND SPECIFICATION DRAWING

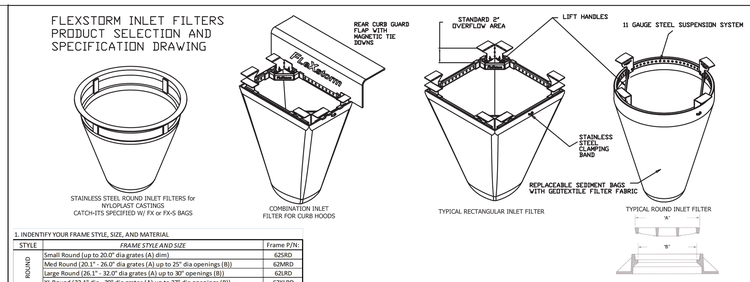

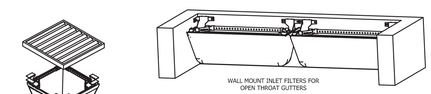

1. INDENTIFY YOUR FRAME STYLE, SIZE, AND MATERIAL

STYLE	FRAME STYLE AND SIZE	Frame P/N:
ROUND	Small Round (up to 20.0" dia grates (A) dim)	62SRD
	Med Round (20.1" - 26.0" dia grates (A) up to 25" dia openings (B))	62MRD
	Large Round (26.1" - 32.0" dia grates (A) up to 30" openings (B))	62LRD
	XL Round (32.1" dia - 39" dia grates (A) up to 37" dia openings (B))	62XLRD
RECT/ SQUARE	Small Rect / Square (up to 16" (B) x 16" (D) openings or 64" perimeter)	62SSQ
	Med Rect / Square (up to 24" (B) x 24" (D) openings or 96" perimeter)	62MSQ
	Large Rect / Square (up to 36" (B) x 24" (D) openings or 120" perimeter)	62LSQ
	XL Rect / Square (side by side 2pc set to fit up to 48" (B) x 36" (D) openings)	62XLSQ
CORNER INLETS	Small Rect / Square (ref Rect sizing; shipped with Magnetic Curb Flaps)	62SCB
	Med Rect / Square (ref Rect sizing; shipped with Magnetic Curb Flaps)	62MCB
	Large Rect / Square (ref Rect sizing; shipped with Magnetic Curb Flaps)	62LCB
	XL Rect / Square (ref Rect sizing; shipped with Magnetic Curb Flaps)	62XLCB
NYLOPLAST	12" diameter Nyloplast castings (Stainless Steel Framing standard)	6212NY
	15" diameter Nyloplast castings (Stainless Steel Framing standard)	6215NY
	18"diameter Nyloplast castings (Stainless Steel Framing standard)	6218NY
	24" diameter Nyloplast castings (Stainless Steel Framing standard)	6224NY
	30" diameter Nyloplast castings (Stainless Steel Framing standard)	6230NY
WALL MOUNT	Open Throat Gutters - Curb Opening Size	
	Up to 4' (1 Filter and Mounting Hardware)	62WM1
	Between 4' and 8' (2 Filters and Mounting Hardware)	62WM2
	Between 8' and 12' (3 Filters and Mounting Hardware)	62WM3
	Between 12' and 16' (4 Filters and Mounting Hardware)	62WM4
UPGRADED FRAMING MATERIAL OPTIONS (STANDARD IS ZINC PLATED)		SUFFIX
CHROME PLATED FRAMING FOR HIGH SALT EXPOSURE		- CHR
STAINLESS STEEL FRAMING FOR HIGH SALT AND/OR CHEMICAL EXPOSURE		- SS

2. SELECT YOUR FILTER BAG PART NUMBER

FLEXSTORM FILTER BAGS	(22" depth) STD Bag P/N	(12" depth) Short Bag P/N	Clean Water Flow Rate (GPM/SqFt)	Min A.O.S. (US Sieve)
FX: Standard Woven Bag	FX	FX-S	200	40
FX+: Woven w/ MyCelx	FXP	FXP-S	200	40
FXO: Woven w/ Oil Boom	FXO	FXO-S	200	40
PC: Post Construction Bag	PC	PC-S	137	140
PC+: PC Bag w/ MyCelx	PCP	PCP-S	137	140
LL: Litter and Leaf Bag	LL	LL-S	High	3.5
IL: IDOT Non-Woven Bag	IL	IL-S	145	70

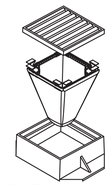

INSTALLATION:
1. REMOVE GRATE
2. DROP FLEXSTORM INLET FILTER ONTO LOAD BEARING LIP OF CASTING OR CONCRETE STRUCTURE
3. REPLACE GRATE

SPECIFICATIONS FOR STANDARD BAGS BY NOMINAL SIZE

Nominal Bag Size	Solids Storage (CuFt)	Filtered Flow Rate at 50% Max FX (Woven)	PC (Post Constr)	IL (Non Woven)	* PC Oil Retent (Oz)	**PCP Oil Retent (Oz)
Small	1.6	1.2	0.8	0.9	66	155
Medium	2.1	1.8	1.2	1.3	96	185
Large	3.8	2.2	1.5	1.6	120	209
XL	4.2	3.6	2.4	2.6	192	370

* PC filter bag at 50% max adsorption capacity
** PC filter bag at 50% capacity and MyCelx skimmer at 100% capacity

3. CREATE YOUR FLEXSTORM INLET FILTER PART NUMBER

		-	
Frame P/N from Step 1.	Filter Bag P/N from Step 2.		Framing Material

ALL PRODUCTS MANUFACTURED BY INLET & PIPE PROTECTION, INC DISTRIBUTED BY ADS
WWW.INLETFILTERS.COM
(866) 287-8655 PH
(630) 355-3477 FX
INF@INLETFILTERS.COM

SIZE C | DWG NO IPP Flexstorm Specifications | REV
SCALE | SHEET 1 OF 1

6

The Slicing Method

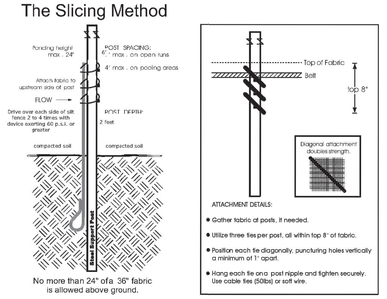

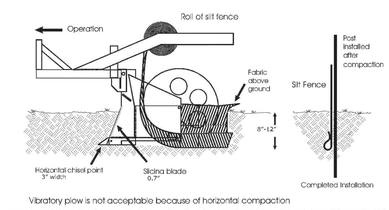

Figure 6.62b Schematics for using the slicing method to install a sediment fence. Adapted from *Silt Fence that Works*

6

The Slicing Method

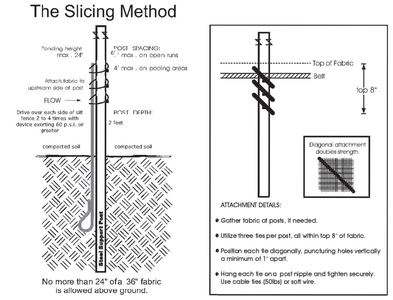

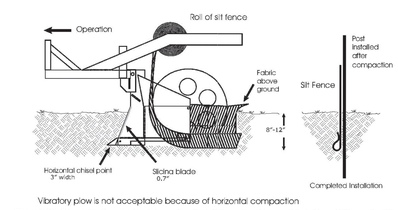

Figure 6.62b Schematics for using the slicing method to install a sediment fence. Adapted from *Silt Fence that Works*

SILT FENCE

NOT TO SCALE

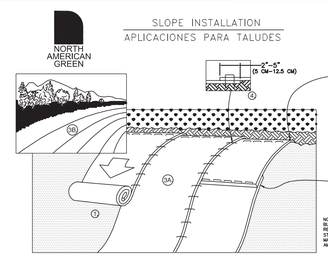

1. PREPARE SOIL BEFORE INSTALLING BLANKETS, INCLUDING ANY NECESSARY APPLICATION OF LIME, FERTILIZER, AND SEED. NOTE: WHEN USING CELL-O-SEED DO NOT SEED PREPARED AREA. CELL-O-SEED MUST BE INSTALLED WITH PAPER SIDE DOWN.

2. BEGIN AT THE TOP OF THE SLOPE BY ANCHORING THE BLANKET IN A 6" (15 CM) DEEP X 6" (15 CM) WIDE TRENCH WITH APPROXIMATELY 12" (30cm) OF BLANKET EXTENDED BEYOND THE UP-SLOPE PORTION OF THE TRENCH. ANCHOR THE BLANKET WITH A ROW OF STAPLES/STAKES APPROXIMATELY 12" (30 CM) APART IN THE BOTTOM OF THE TRENCH. BACKFILL AND COMPACT THE TRENCH AFTER STAPLING. APPLY SEED TO COMPACTED SOIL AND FOLD REMAINING 12" (30 CM) PORTION OF BLANKET BACK OVER SEED AND COMPACTED SOIL. SECURE BLANKET OVER COMPACTED SOIL WITH A ROW OF STAPLES/STAKES SPACED APPROXIMATELY 12" (30 CM) APART ACROSS THE WIDTH OF THE BLANKET.

3. ROLL THE BLANKETS (A.) DOWN OR (B.) HORIZONTALLY ACROSS THE SLOPE. BLANKETS WILL UNROLL WITH APPROPRIATE SIDE AGAINST THE SOIL SURFACE. ALL BLANKETS MUST BE SECURELY FASTENED TO SOIL SURFACE BY PLACING STAPLES/STAKES IN APPROPRIATE LOCATIONS AS SHOWN IN THE STAPLE PATTERN GUIDE. WHEN USING THE DOT SYSTEM , STAPLES/STAKES SHOULD BE PLACED THROUGH EACH OF THE COLORED DOTS CORRESPONDING TO THE APPROPRIATE STAPLE PATTERN.

4. THE EDGES OF PARALLEL BLANKETS MUST BE STAPLED WITH APPROXIMATELY 2" – 5" (5 CM – 12.5 CM) OVERLAP DEPENDING ON BLANKET TYPE.

5. CONSECUTIVE BLANKETS SPLICED DOWN THE SLOPE MUST BE PLACED END OVER END (SHINGLE STYLE) WITH AN APPROXIMATE 3" (7.5 CM) OVERLAP. STAPLE THROUGH OVERLAPPED AREA, APPROXIMATELY 12" (30 CM) APART ACROSS ENTIRE BLANKET WIDTH.

NOTE: *IN LOOSE SOIL CONDITIONS, THE USE OF STAPLE OR STAKE LENGTHS GREATER THAN 6" (15 CM) MAY BE NECESSARY TO PROPERLY SECURE THE BLANKETS.

ALL BLANKETS SHALL BE INSTALLED WITH 6" BIOSTAKES.

JAMES GLASCOTT REGISTERED PE12400652 STATE OF INDIANA PROFESSIONAL ENGINEER

WT Group — Engineering • Design • Consulting

WT GROUP JOB NUMBER - C2400072

WT GROUP
Structural | Mechanical|Electrical|Plumbing
Civil | Land Survey | Telecommunication| Aquatic
Accessibility Consulting | Design & Program Management
Engineering with Precision, Pace & Passion.
2675 Prairie Avenue | Hoffman Estates, IL 60192
P: 224.293.6333 | F: 224.293.6444
wtengineering.com

©COPYRIGHT 2025 THE WT GROUP, LLC

DLA ARCHITECTS Ltd.
www.dla-ltd.com
847.742.4063
60143 | Itasca | Suite 1300 | Two Pierce Place
form follows learning℠

SCHOOL TOWN OF MUNSTER
2025 NEW TENNIS FACILITY
MUNSTER HIGH SCHOOL
8823 COLUMBIA AVE. MUNSTER, IN 46321

SCHOOL TOWN OF MUNSTER

DATE:	DESCRIPTION:
9/15/25	TOWN SUBMITTAL

ISSUED FOR BID

PROJECT # 2024.073
DATE: AUGUST 12, 2025
SHEET TITLE: SITE UTILITY DETAILS
SHEET: C-6.2

GENERAL NOTES

1. ALL WORK SHALL BE PERFORMED IN ACCORDANCE WITH THE FOLLOWING:
   - 1.1. INDIANA DEPARTMENT OF TRANSPORTATION "STANDARD SPECIFICATIONS," LATEST EDITION.
   - 1.2. AMERICAN WATER WORKS ASSOCIATION STANDARDS.
   - 1.3. INDIANA STORM WATER QUALITY MANUAL CURRENT EDITION.
   - 1.4. BUILDING CODES AND ORDINANCES OF THE LOCAL GOVERNING AUTHORITIES.
   - 1.5. UNITED STATES DEPARTMENT OF LABOR OCCUPATIONAL SAFETY AND HEALTH ADMINISTRATION (OSHA) REGULATIONS, 29 CFR PART 1926, "SAFETY AND HEALTH REGULATIONS FOR CONSTRUCTION."
   - 1.6. INDIANA DRAINAGE LAW.
   - 1.7. AMERICANS WITH DISABILITIES ACT.
   - 1.8. INDIANA ENVIRONMENTAL PROTECTION AGENCY REQUIREMENTS.
   - 1.9. TITLE 320, 325, 325.1 AND 330 OF THE INDIANA ADMINISTRATIVE CODE.
2. ALL REQUIRED PERMITS FROM THE APPROPRIATE GOVERNING AGENCY(S) SHALL BE OBTAINED FOR CONSTRUCTION ALONG OR ACROSS EXISTING STREETS OR HIGHWAYS. THE CONTRACTOR SHALL MAKE ARRANGEMENTS FOR THE PROPER BRACING, SHEETING, SHORING AND OTHER REQUIRED PROTECTION OF ALL ROADWAYS PRIOR TO THE COMMENCEMENT OF CONSTRUCTION OPERATIONS. THE CONTRACTOR SHALL BE RESPONSIBLE FOR ANY DAMAGE TO THE STREETS OR ROADWAYS AND ASSOCIATED STRUCTURES AND SHALL MAKE ALL NECESSARY REPAIRS AT HIS EXPENSE AND TO THE SATISFACTION OF THE GOVERNING AGENCY. THE CONTRACTOR SHALL BE RESPONSIBLE FOR THE INSTALLATION AND MAINTENANCE OF ADEQUATE SIGNAGE AND TRAFFIC CONTROL DEVICES TO INFORM AND PROTECT THE PUBLIC.
3. CONTRACTOR SHALL NOTIFY THE LOCAL ENGINEERING OR PUBLIC WORKS DEPARTMENT AND/OR OTHER GOVERNING AUTHORITY(S) 48 HOURS PRIOR TO COMMENCING CONSTRUCTION ON EACH MAJOR CATEGORY OF WORK, INCLUDING BUT NOT LIMITED TO, ANY PUBLIC IMPROVEMENTS, ROADWAY CLOSURES OR UTILITY INSTALLATIONS. 72 HOUR NOTICE SHALL BE GIVEN FOR ANY WORK ITEM THAT REQUIRES INSPECTION AND TESTING SUCH AS SANITARY SEWER OR WATER MAIN INSTALLATION.
4. CONTRACTOR SHALL NOTIFY ALL UTILITY COMPANIES (GAS, ELECTRIC, TELEPHONE, CABLE, ETC.) AND THE LOCAL MUNICIPALITY TO DETERMINE THE LOCATION OF UNDERGROUND UTILITIES PRIOR TO THE COMMENCEMENT OF CONSTRUCTION IN ORDER TO AVOID POTENTIAL CONFLICTS. CONTRACTOR SHALL CALL THE JOINT UTILITY LOCATING INFORMATION FOR EXCAVATORS (J.U.L.I.E.) AT 1-800-892-0123 OR BY DIALING 811. IT IS ULTIMATELY THE RESPONSIBILITY OF THE CONTRACTOR TO LOCATE ALL EXISTING UTILITIES WHETHER INDICATED ON THE PLANS OR NOT AND TO HAVE THESE UTILITIES STAKED PRIOR TO CONSTRUCTION.
5. CONTRACTOR SHALL BE RESPONSIBLE FOR THE PROTECTION OF ALL PRIVATE AND PUBLIC UTILITIES EVEN THOUGH THEY MAY NOT BE SHOWN ON THE PLANS. ANY UTILITY THAT IS DAMAGED DURING CONSTRUCTION SHALL BE REPAIRED OR REPLACED BY THE CONTRACTOR AT HIS EXPENSE AND TO THE SATISFACTION OF THE UTILITY OWNER.
6. ALL EASEMENTS FOR EXISTING UTILITIES, BOTH PUBLIC AND PRIVATE, AND UTILITIES WITHIN PUBLIC RIGHTS-OF-WAY ARE SHOWN ON THE PLANS PREPARED BY THE ENGINEER ACCORDING TO INFORMATION AVAILABLE FROM PUBLIC RECORDS OR VISIBLE FIELD MARKINGS. THE CONTRACTOR SHALL BE ULTIMATELY RESPONSIBLE FOR DETERMINING THE EXACT LOCATION IN THE FIELD OF THESE UTILITY LINES AND FOR THEIR PROTECTION FROM DAMAGE DUE TO CONSTRUCTION OPERATIONS. IF EXISTING UTILITY LINES OF ANY NATURE ARE ENCOUNTERED WHICH CONFLICT IN LOCATION WITH THE PROPOSED CONSTRUCTION, THE CONTRACTOR SHALL IMMEDIATELY NOTIFY THE ENGINEER SO THE CONFLICT MAY BE RESOLVED.
7. ALL UTILITY CONNECTIONS TO EXISTING LINES SHALL BE CONSTRUCTED IN ACCORDANCE WITH THE RULES AND REGULATIONS AND TO THE SATISFACTION OF THE APPLICABLE UTILITY OWNER(S).
8. CONTRACTOR SHALL FIELD VERIFY ALL DIMENSIONS, COORDINATES AND ELEVATIONS PRIOR TO THE COMMENCEMENT OF CONSTRUCTION AND SHALL IMMEDIATELY NOTIFY THE ENGINEER OF ANY DISCREPANCIES SO THE CONFLICT MAY BE RESOLVED.
9. ALL PROPERTY MARKERS AND REFERENCE MARKERS SHALL BE CAREFULLY PRESERVED DURING CONSTRUCTION UNTIL THEIR LOCATION HAS BEEN WITNESSED OR OTHERWISE TIED IN BY AN AUTHORIZED AGENT OR PROFESSIONALLY LICENSED SURVEYOR.
10. THE SAFE AND ORDERLY PASSAGE OF TRAFFIC AND PEDESTRIANS SHALL BE PROVIDED WHERE CONSTRUCTION OPERATIONS ABUT PUBLIC THROUGH-FARES AND ADJACENT PROPERTY.
11. ALL AREAS DISTURBED BY THE GENERAL CONTRACTOR OR SUB-CONTRACTORS SHALL BE RETURNED TO THE ORIGINAL CONDITIONS OR BETTER, EXCEPT WHERE PROPOSED CONSTRUCTION IS INDICATED ON THE PLANS.
12. NO BURNING OR INCINERATION OF RUBBISH WILL BE PERMITTED ON SITE.
13. PRIOR TO INITIAL ACCEPTANCE BY THE OWNER(S) AND/OR GOVERNING AUTHORITY, ALL WORK SHALL BE INSPECTED AND APPROVED BY THE OWNER AND MUNICIPALITY ENGINEER OR HIS REPRESENTATIVE(S). THE CONTRACTOR SHALL GUARANTEE HIS WORK FOR A PERIOD OF 18 (EIGHTEEN) MONTHS FROM THE DATE OF SUBSTANTIAL COMPLETION AND SHALL BE HELD RESPONSIBLE FOR ANY DEFECTS IN MATERIAL OR WORKMANSHIP OF THIS WORK DURING THAT PERIOD AND UNTIL FINAL ACCEPTANCE IS MADE.
14. CONTRACTOR SHALL BE RESPONSIBLE FOR PROVIDING SAFE AND ADEQUATE WORKING CONDITIONS THROUGHOUT THE DURATION OF CONSTRUCTION OF THE PROPOSED IMPROVEMENTS.
15. CONTRACTOR SHALL KEEP THE PUBLIC STREET PAVEMENTS CLEAN OF DIRT AND DEBRIS AND, WHEN NECESSARY, CLEAN PAVEMENTS AT THE END OF EACH WORKING DAY.
16. ALL CONSTRUCTION STAKING, SCHEDULING AND PAYMENT IS THE RESPONSIBILITY OF THE CONTRACTOR.
17. THREE (3) ORIGINAL COPIES OF ALL SHOP DRAWINGS SHALL BE SUBMITTED TO THE ENGINEER FOR (BUT NOT LIMITED TO) THE FOLLOWING ITEMS:
   - 17.1. ASPHALT PAVEMENT MIX DESIGN
   - 17.2. CONCRETE MIX DESIGN
   - 17.3. GRANULAR MATERIAL GRADATION
   - 17.4. PRECAST CONCRETE STRUCTURES (MANHOLES, INLETS, CATCH BASINS, VAULTS, ETC.)
   - 17.5. WATER MAIN MATERIALS (VALVES, FIRE HYDRANTS, ETC.)
18. AFTER COMPLETION OF THE PROPOSED IMPROVEMENTS AND WHEN REQUIRED BY THE GOVERNING AUTHORITY(S), CONTRACTOR SHALL PROVIDE THE OWNER AND ENGINEER WITH AS-BUILT AND/OR RECORD DRAWINGS, SIGNED AND SEALED BY A PROFESSIONALLY LICENSED ENGINEER OR SURVEYOR AND SHALL INCLUDE AT A MINIMUM (WHERE APPLICABLE TO THE SCOPE OF WORK) THE FOLLOWING ITEMS:
   - 19.1 TOPOGRAPHY AND SPOT GRADE ELEVATIONS OF ALL PROPOSED PERMANENT SITE FEATURES INCLUDING ANY STORM WATER FACILITIES OR MODIFICATIONS TO EXISTING STORM WATER FACILITIES.
   - 19.2 HORIZONTAL AND VERTICAL LOCATION AND ALIGNMENT OF ALL PROPOSED ROADWAYS, PARKING LOTS, UTILITIES, BUILDINGS OR OTHER PERMANENT SITE FEATURES.
   - 19.3 RIM AND INVERT AND/OR TOP OF PIPE ELEVATIONS FOR ALL PROPOSED UTILITIES.
   - 19.4 AS-BUILT AND/OR RECORD DRAWING INFORMATION SHALL BE SHOWN ON THE APPROVED ENGINEERING PLANS ISSUED FOR CONSTRUCTION. ANY AND ALL DEVIATIONS FROM THESE APPROVED PLANS SHALL BE SHOWN BY MEANS OF STRIKING THROUGH THE PROPOSED INFORMATION AND CLEARLY INDICATING THE AS-BUILT LOCATIONS AND ELEVATIONS ON THE APPLICABLE PLAN SHEET.

SITE GRADING AND PAVING

1. ALL SITE WORK, GRADING, AND PAVING OPERATIONS WITHIN THE LIMITS OF THIS PROJECT SHALL BE PERFORMED IN ACCORDANCE WITH THE INDIANA DEPARTMENT OF TRANSPORTATION "STANDARD SPECIFICATIONS," LATEST EDITION ("STANDARD SPECIFICATIONS"), ANY SPECIAL PROVISIONS, THE NOTES IN THE PLANS AND IN ACCORDANCE WITH THE CODES AND ORDINANCES OF THE GOVERNING AUTHORITIES. IN CASE OF CONFLICT, THE MORE STRINGENT CODE SHALL TAKE PRECEDENCE.
2. EARTH EXCAVATION SHALL INCLUDE CLEARING, STRIPPING AND STOCKPILING TOPSOIL, REMOVING UNSUITABLE MATERIALS, CONSTRUCTION OF EMBANKMENTS, NON-STRUCTURAL FILLS, FINAL SHAPING AND TRIMMING TO THE LINES, GRADES AND CROSS SECTIONS SHOWN ON THE PLANS. THIS WORK SHALL BE PERFORMED IN ACCORDANCE WITH THE APPLICABLE PROVISIONS OF THE "STANDARD SPECIFICATIONS." ALL UNSUITABLE OR EXCESS MATERIAL SHALL BE DISPOSED OF OFF-SITE OR AS DIRECTED BY THE PROJECT REPRESENTATIVE IN THE FIELD.
3. EXCAVATED TOPSOIL SHALL BE STOCKPILED ON THE SITE IN AREAS DESIGNATED BY THE PROJECT ENGINEER UNTIL SUCH TIME THAT THIS TOPSOIL CAN BE USED FOR FINAL GRADING. UNLESS OTHERWISE NOTED ON THE PLANS, A MINIMUM OF 6" TOPSOIL RE-SPREAD AND SEEDING FOR ALL DISTURBED AREAS IS REQUIRED.
4. THE SOILS INVESTIGATION REPORT FOR THE SITE AND ALL ADDENDA THERETO ARE SUPPORTING DOCUMENTS FOR THIS PROJECT. THE RECOMMENDATIONS AS STATED IN SAID REPORT ARE HEREBY INCORPORATED INTO THESE CONSTRUCTION NOTES BY REFERENCE AND SHALL BE FOLLOWED BY ALL CONTRACTORS. THE GRADING OPERATIONS ARE TO BE CLOSELY SUPERVISED AND INSPECTED, PARTICULARLY DURING THE REMOVAL OF UNSUITABLE MATERIAL AND THE CONSTRUCTION OF EMBANKMENTS OR BUILDING PADS, BY A SOILS ENGINEER OR HIS REPRESENTATIVE. FURTHER CONSTRUCTION OPERATIONS WILL NOT BE PERMITTED UNTIL THE SOILS ENGINEER ISSUES A WRITTEN STATEMENT THAT THE AREA IN QUESTION HAS BEEN SATISFACTORILY PREPARED AND IS READY FOR CONSTRUCTION.
5. ALL TESTING, INSPECTION AND SUPERVISION OF SOIL QUALITY, UNSUITABLE SOIL REMOVAL AND ITS REPLACEMENT AND OTHER SOILS RELATED OPERATIONS SHALL BE ENTIRELY THE RESPONSIBILITY OF THE CONTRACTOR.
6. THE CONTRACTOR SHALL USE CARE IN GRADING NEAR TREES, SHRUBS, AND BUSHES WHICH ARE NOT NOTED TO BE REMOVED SO AS NOT TO CAUSE INJURY TO ROOTS OR TRUNKS.
7. THE CONTRACTOR SHALL USE CARE IN GRADING OR EXCAVATING NEAR ANY AND ALL EXISTING ITEMS WHICH ARE NOT INDICATED TO BE REMOVED. ANY DAMAGE DONE TO THESE EXISTING ITEMS BY THE CONTRACTOR'S OPERATIONS SHALL BE REPAIRED AT HIS OWN EXPENSE.
8. REMOVED DRIVEWAY PAVEMENT, SIDEWALK, CURBS, TREES AND STUMPS SHALL BE DISPOSED OF LEGALLY OFF-SITE AT LOCATIONS DETERMINED BY THE CONTRACTOR.
9. ON AND OFF SITE PAVING AND CURBS TO REMAIN SHALL BE PROTECTED FROM DAMAGE, AND, IF DAMAGED, SHALL BE REPLACED PROMPTLY TO MEET STATE AND LOCAL STANDARD SPECIFICATIONS IN MATERIALS AND WORKMANSHIP.
10. PROPOSED ELEVATIONS INDICATE FINISHED GRADE CONDITIONS. FOR ROUGH GRADING ELEVATIONS ALLOW FOR THE THICKNESS OF THE PROPOSED PAVING (ROADS, WALKS, DRIVE, ETC.) SECTION OR TOPSOIL AS INDICATED ON THE PLANS.
11. CONTRACTOR SHALL PROVIDE SMOOTH VERTICAL CURVES THROUGH THE HIGH AND LOW POINTS INDICATED BY SPOT ELEVATIONS ON THE PLANS. CONTRACTOR SHALL PROVIDE UNIFORM SLOPES BETWEEN NEW AND EXISTING GRADES AND AVOID ANY RIDGES AND/OR DEPRESSIONS.
12. ALL PROPOSED GRADING, PAVEMENT, APRONS, CURBS, WALKS, ETC. SHALL MATCH EXISTING GRADES FLUSH.
13. ALL EXISTING AND PROPOSED TOP OF FRAME ELEVATIONS FOR STORM, SANITARY, WATER AND OTHER UTILITY STRUCTURES SHALL BE ADJUSTED TO MEET FINISHED GRADE WITHIN THE PROJECT LIMITS.
14. ALL CONCRETE POURED SHALL BE:
   - 14.1. MINIMUM COMPRESSIVE STRENGTH:
     - 14.1.1. 3,500 P.S.I. AT 14 DAYS (PER I.N.D.O.T.)
     - 14.1.2. 4,500 P.S.I. AT 28 DAYS (PER A.C.I.)
   - 14.2. MAX WATER-CEMENTITIOUS MATERIALS RATIO: 0.44 (AIR-ENTRAINED)
   - 14.3. AIR CONTENT: 6%, +/- 1.5% AT POINT OF DELIVERY FOR EXPOSED CONCRETE
15. WHEN FIBER MESH REINFORCEMENT IS SPECIFIED, IT SHALL CONSIST OF FIBRIIIATED POLYPROPYLENE FIBERS ENGINEERED AND DESIGNED FOR USE IN CONCRETE PAVEMENT, COMPLYING WITH ASTM C 1116, TYPE III, $\frac{1}{2}$ TO $\frac{3}{4}$ INCHES LONG. FIBERS SHALL BE UNIFORMLY DISPERSED IN THE CONCRETE MIXTURE AT THE MANUFACTURER'S RECOMMENDED RATE, BUT NOT LESS THAN 1.5 LBS / CU. YD.
16. THE GRADING AND CONSTRUCTION OF THE PROPOSED PAVEMENT IMPROVEMENTS SHALL NOT CAUSE PONDING OF STORM WATER. ALL AREAS ADJACENT TO THESE IMPROVEMENTS SHALL BE GRADED TO ALLOW POSITIVE DRAINAGE AND MATCH EXISTING GRADES FLUSH.
17. CONTRACTOR SHALL ENSURE POSITIVE SITE DRAINAGE AT THE END OF EACH WORKING DAY DURING CONSTRUCTION OPERATIONS. FAILURE TO PROVIDE ADEQUATE DRAINAGE WILL PRECLUDE THE CONTRACTOR FROM ANY POSSIBLE COMPENSATION REQUESTED DUE TO DELAYS OR UNSUITABLE MATERIALS CREATED AS A RESULT.
18. DRIVEWAYS SHALL BE CONSTRUCTED SO AS NOT TO IMPEDE THE SURFACE DRAINAGE SYSTEM.
19. TRAFFIC CONTROL DEVICES SHALL BE IN CONFORMANCE WITH THE INDIANA DEPARTMENT OF TRANSPORTATION STANDARDS AND SHALL BE INSTALLED AND PROVIDED WHENEVER CONSTRUCTION FOR UTILITIES ARE WITHIN STREET AREAS. APPLICABLE ORDINANCES OF THE MUNICIPALITY, COUNTY OR STATE SHALL ALSO GOVERN THE TRAFFIC CONTROL REQUIREMENTS.
20. EXISTING PAVEMENT AGGREGATE BASE COURSE SHALL NOT BE RE-USED AS AGGREGATE BASE COURSE FOR THE NEW PAVEMENT SECTION.

STORM SEWERS

1. ALL STORM SEWER CONSTRUCTION SHALL BE IN ACCORDANCE WITH THE INDIANA DEPARTMENT OF TRANSPORTATION "STANDARD SPECIFICATIONS," LATEST EDITION ("INDOT STANDARD SPECIFICATIONS"), ANY SPECIAL PROVISIONS, THE NOTES ON THE PLANS, AND IN ACCORDANCE WITH THE CODES AND ORDINANCES OF THE GOVERNING AUTHORITIES. IN CASE OF CONFLICT, THE MORE STRINGENT CODE SHALL TAKE PRECEDENCE.
2. ALL STORM SEWER PIPE AND STRUCTURES SHALL BE FURNISHED AND INSTALLED IN ACCORDANCE WITH THE "STANDARD SPECIFICATIONS."
3. ALL PRECAST CONCRETE STRUCTURES SHALL BE REINFORCED AND DESIGNED FOR HS-20 LOADING UNLESS OTHERWISE NOTED.
4. ALL RCP STORM SEWER PIPE 12" IN DIAMETER AND LARGER SHALL BE REINFORCED CONCRETE PIPE, CLASS IV, PER ASTM C-76 WITH FLEXIBLE (O-RING) GASKET JOINTS IN CONFORMANCE WITH ASTM C-443 AND SECTION 31-1.08 OF THE "STANDARD SPECIFICATIONS." ALL 10" DIAMETER RCP STORM SEWER PIPE SHALL BE REINFORCED CONCRETE PIPE, CLASS V.
5. ALL HDPE STORM SEWER PIPE SHALL BE HIGH DENSITY POLYETHYLENE PIPE PER ASTM F-2306 WITH WATERTIGHT JOINTS CONFORMING TO ASTM D-3212.
6. ALL PVC STORM SEWER PIPE SHALL BE POLYVINYL CHLORIDE SDR 26 PIPE PER ASTM D-3034 WITH WATERTIGHT JOINTS CONFORMING TO ASTM D-3212, UNLESS OTHERWISE NOTED.
7. ALL STORM SEWER TRENCH EXCAVATIONS AND PIPE FOUNDATION, BEDDING AND HAUNCHING SHALL BE CONSTRUCTED IN ACCORDANCE WITH THE APPLICABLE SECTIONS OF THE "STANDARD SPECIFICATIONS."
   - 7.1. ALL STORM SEWERS MUST BE PLACED ON PROPERLY COMPACTED STONE BEDDING. PIPE BEDDING MATERIAL SHALL BE A MINIMUM OF FOUR (4) INCHES THICK UNDER THE BARREL OF THE PIPE AND FOR PVC PIPE, MATERIAL SHALL BE EXTENDED A MINIMUM OF 12" OVER THE TOP OF THE PIPE PER ASTM D-2321. PIPE BEDDING MATERIAL SHALL BE CRUSHED GRAVEL OR STONE MEETING INDOT GRADATION #53.
   - 7.2. TRENCH BACKFILL MATERIAL SHALL BE PLACED AND COMPACTED TO A MINIMUM OF 95% MODIFIED PROCTOR DENSITY, PER ASTM D-1557, OVER ALL STORM SEWERS WHICH ARE CONSTRUCTED UNDER, OR WITHIN TWO (2) FEET OF, ANY PROPOSED OR EXISTING PAVEMENT, PARKING LOTS OR SIDEWALKS.
8. ALL REQUIRED STORM STRUCTURE RIM ADJUSTMENTS SHALL BE MADE WITH PRECAST CONCRETE ADJUSTING RINGS NOT TO EXCEED A MAXIMUM OF EIGHT (8) INCHES IN OVERALL HEIGHT. A MAXIMUM OF TWO (2) ADJUSTING RINGS ARE ALLOWED. BUTYLROPE JOINT SEALANT SHALL BE USED ON ALL JOINTS BETWEEN THE PRECAST ELEMENTS.
9. ALL FIELD TILE ENCOUNTERED DURING CONSTRUCTION OPERATIONS SHALL BE CONNECTED TO THE PROPOSED STORM SEWER SYSTEM OR EXTENDED TO OUTLET INTO A PROPOSED DRAINAGE WAY. IF THIS CANNOT BE ACCOMPLISHED, THEN IT SHALL BE REPAIRED WITH NEW PIPE OF SIMILAR SIZE AND MATERIAL TO THE ORIGINAL LINE AND PUT IN ACCEPTABLE OPERATING CONDITION. A RECORD OF THE LOCATION OF ALL FIELD TILE OR DRAIN PIPE ENCOUNTERED SHALL BE KEPT BY THE CONTRACTOR AND TURNED OVER TO THE OWNER AND/OR ENGINEER UPON COMPLETION OF THE PROJECT AND ACCURATELY SHOWN ON THE RECORD DRAWINGS.

SOIL EROSION AND SEDIMENT CONTROL CONSTRUCTION SCHEDULE

1. OBTAIN NPDES AND OTHER APPLICABLE SITE PERMITS AND REVIEW PROJECT'S STORMWATER POLLUTION PREVENTION PLAN (SWPPP). CONTRACTOR SHALL BE RESPONSIBLE FOR MAINTAINING AND UPDATING THE SWPPP THROUGHOUT THE DURATION OF CONSTRUCTION AS NECESSARY UNTIL FINAL SITE STABILIZATION IS ACHIEVED.
2. INSTALL STABILIZED CONSTRUCTION ENTRANCE.
3. INSTALL PERIMETER SEDIMENT CONTROL MEASURES (E.G. SILT FENCE).
4. INSTALL PROTECTION DEVICES FOR EXISTING DRAINAGE INLET AND OUTLET STRUCTURES, IF APPLICABLE.
5. PERFORM STORMWATER POLLUTION PREVENTION SITE INSPECTIONS ON A WEEKLY BASIS AND WITHIN TWENTY-FOUR (24) HOURS OF THE END OF A RAINFALL EVENT THAT IS 0.5 INCH OR GREATER (OR EQUIVALENT SNOWFALL). AT A MINIMUM, THE INSPECTIONS SHALL INCLUDE THE DISTURBED AREAS OF THE CONSTRUCTION SITE THAT HAVE NOT BEEN FINALLY STABILIZED, ALL STRUCTURAL CONTROL MEASURES, LOCATIONS WHERE VEHICLES ENTER OR EXIT THE SITE, AND ANY ADDITIONAL BEST MANAGEMENT PRACTICES IDENTIFIED IN THE SWPPP.
   - 5.1. ALL SITE EROSION AND SEDIMENT CONTROL MEASURES AND BEST MANAGEMENT PRACTICES SHALL BE THE RESPONSIBILITY OF THE GENERAL CONTRACTOR AND SHALL BE CONTINUOUSLY MAINTAINED THROUGHOUT THE DURATION OF CONSTRUCTION (SEE THE STORMWATER POLLUTION PREVENTION NOTES AND STORMWATER POLLUTION PREVENTION MAINTENANCE SCHEDULE FOR ADDITIONAL INFORMATION). CONTRACTOR SHALL MAKE AND COMPLETE THE REQUIRED REPAIRS WITHIN FORTY-EIGHT (48) HOURS OF THE INSPECTION.
   - 5.2. CONTRACTOR IS RESPONSIBLE FOR INSTALLATION OF ANY ADDITIONAL STRUCTURAL CONTROL MEASURES NECESSARY TO PREVENT EROSION AND SEDIMENTATION AS DETERMINED BY THE SITE INSPECTIONS.
   - 5.3. PERFORM STREET CLEANING OPERATIONS AND OTHER BEST MANAGEMENT PRACTICES AS NEEDED.
6. PERFORM SITE CLEARING AND GRUBBING AND REMOVE EXISTING VEGETATION AS NEEDED FOR INITIAL SITE GRADING OPERATIONS. VEGETATED SITE AREAS THAT ARE NOT INCLUDED WITH THE INITIAL GRADING SHALL REMAIN UNDISTURBED. ALL TOPSOIL STOCKPILES SHALL BE SURROUNDED WITH SILT FENCE AND STABILIZED WITHIN THREE (3) DAYS OF FORMING THE STOCKPILE.
7. REMOVE ALL ITEMS NOTED FOR REMOVAL IN THE DEMOLITION PLAN.
8. PERFORM ROUGH GRADING OPERATIONS, CONSTRUCT OVERFLOW ROUTES, AND STABILIZE ALL DISTURBED AREAS, INCLUDING BUT NOT LIMITED TO STEEP SLOPES, DRAINAGE CHANNELS AND SWALES (I.E. TEMPORARY AND PERMANENT SEEDING, EROSION CONTROL BLANKETS, RIP-RAP, CHECK DAMS, TEMPORARY DRAINAGE DIVERSIONS, ETC.).
9. INSTALL TEMPORARY CONCRETE WASHOUT FACILITY.
10. INSTALL BUILDING FOUNDATIONS AND BEGIN BUILDING CONSTRUCTION.
11. INSTALL DETENTION SYSTEMS, STORM SEWERS AND OTHER SITE UTILITIES AND IMMEDIATELY INSTALL DRAINAGE INLET AND OUTLET PROTECTION DEVICES AS INDICATED ON THE PLANS.
12. PROVIDE TEMPORARY SEEDING AND/OR MULCHING FOR ALL DISTURBED SITE AREAS THAT WILL NOT BE WORKED ON FOR MORE THAN FOURTEEN (14) DAYS.
13. INSTALL CURBS AND BEGIN SITE PAVING OPERATIONS (I.E. DRIVEWAYS, SIDEWALKS, ETC.).
14. COMPLETE BUILDING CONSTRUCTION AND REMAINING SITE IMPROVEMENTS.
15. REMOVE TEMPORARY SITE EROSION AND SEDIMENT CONTROL MEASURES WITHIN THIRTY (30) DAYS OF FINAL SITE STABILIZATION.
16. SUBMIT A NOTICE OF TERMINATION (N.O.T.) TO THE INDIANA DEPARTMENT OF ENVIRONMENTAL MANAGEMENT UPON COMPLETION OF ALL SITE CONSTRUCTION AND FINAL SITE STABILIZATION (I.E. OVER 70% VEGETATIVE COVER).

STORMWATER POLLUTION PREVENTION NOTES

1. COPIES OF THE APPROVED STORM WATER POLLUTION PREVENTION PLANS SHALL BE MAINTAINED ON THE SITE AT ALL TIMES ALONG WITH THE PERMIT, INCIDENT OF NON-COMPLIANCE (I.O.N.) FORM AND INSPECTION FORMS.
2. CONTRACTOR SHALL PROVIDE COPIES OF ALL SWPPP REPORTS, FORMS, AND LOGS TO THE WT GROUP ONCE THE SITE HAS BEEN STABILIZED. THE CONTRACTOR SHALL MAINTAIN THESE DOCUMENTS FOR A PERIOD OF 3 YEARS FROM THE FINAL STABILIZATION OF THE SITE.
3. CONTRACTOR SHALL BE RESPONSIBLE FOR PROVIDING ALL STORMWATER POLLUTION PREVENTION PLAN (SWPPP) INSPECTIONS, INSPECTION REPORTS, CORRECTIVE ACTION FORMS, SWPPP AMENDMENT LOGS, SUBCONTRACTOR CERTIFICATIONS/AGREEMENTS, GRADING AND STABILIZATION ACTIVITIES LOGS, SWPPP TRAINING LOGS, AND DELEGATION OF AUTHORITY FORMS FOR THE DURATION OF THE PROJECT.
   - 3.1. INDIANA QUALIFIED PERSONNEL SHALL INSPECT DISTURBED AREAS OF THE CONSTRUCTION SITE THAT HAVE NOT BEEN FINALLY STABILIZED, STRUCTURAL CONTROL MEASURES, AND LOCATIONS WHERE VEHICLES ENTER OR EXIT THE SITE AT LEAST ONCE EVERY SEVEN CALENDAR DAYS AND WITHIN TWENTY-FOUR (24) HOURS OF THE END OF A RAINFALL EVENT THAT IS 0.5 INCH OR GREATER (OR EQUIVALENT SNOWFALL). REQUIRED REPAIRS SHOULD BE COMPLETED WITHIN FORTY-EIGHT (48) HOURS OF THE INSPECTION.
   - 3.2. IT IS THE RESPONSIBILITY OF THE GENERAL CONTRACTOR TO INFORM ANY SUBCONTRACTOR(S) WHO MAY PERFORM WORK ON THIS PROJECT, OF THE REQUIREMENTS IN IMPLEMENTING AND MAINTAINING THESE EROSION CONTROL PLANS AND THE NATIONAL POLLUTANT DISCHARGE ELIMINATION SYSTEM (NPDES) PERMIT REQUIREMENTS SET FORTH BY THE INDIANA EPA.
4. ALL EROSION AND SEDIMENTATION CONTROL MEASURES AND DEVICES SHALL BE INSTALLED AND FUNCTIONAL BEFORE THE SITE IS OTHERWISE DISTURBED. THEY SHALL BE KEPT OPERATIONAL AND MAINTAINED CONTINUOUSLY THROUGHOUT THE PERIOD OF LAND DISTURBANCE UNTIL PERMANENT SITE STABILIZATION HAS BEEN ACHIEVED.
5. PRIOR TO COMMENCING LAND-DISTURBING ACTIVITIES IN AREAS OTHER THAT INDICATED ON THESE PLANS (INCLUDING BUT LIMITED TO, ADDITIONAL PHASES OF DEVELOPMENT AND OFF-SITE BORROW OR WASTE AREAS) A SUPPLEMENTARY EROSION CONTROL PLAN SHALL BE SUBMITTED FOR REVIEW.
6. THE GOVERNING AUTHORITIES HAVING JURISDICTION OVER THE PROJECT SITE MUST BE NOTIFIED ONE (1) WEEK PRIOR TO THE PRE-CONSTRUCTION CONFERENCE, ONE (1) WEEK PRIOR TO THE COMMENCEMENT OF LAND DISTURBING ACTIVITIES, AND ONE (1) WEEK PRIOR TO THE FINAL INSPECTION.
7. THE CONTRACTOR IS RESPONSIBLE FOR INSTALLATION OF ANY ADDITIONAL EROSION CONTROL MEASURES NECESSARY TO PREVENT EROSION AND SEDIMENTATION AS DETERMINED BY THE GOVERNING AUTHORITY.
8. IF AFTER REPEATED FAILURE ON THE PART OF THE CONTRACTOR TO PROPERLY CONTROL EROSION, POLLUTION, AND/OR SILTATION, THE GOVERNING AUTHORITIES RESERVE THE RIGHT TO EFFECT NECESSARY CORRECTIVE MEASURES AND CHARGE ANY COSTS TO THE CONTRACTOR.
9. UNLESS OTHERWISE INDICATED, ALL VEGETATIVE AND STRUCTURAL EROSION AND SEDIMENT CONTROL PRACTICES WILL BE CONSTRUCTED ACCORDING TO MINIMUM STANDARDS AND SPECIFICATIONS IN THE INDIANA URBAN MANUAL LATEST EDITION.
10. INLET PROTECTION SHALL BE INSTALLED AROUND EACH INLET OR CATCH BASIN. THESE SHALL BE MAINTAINED UNTIL THE TRIBUTARY DRAINAGE AREAS HAVE ADEQUATE GRASS COVER OR APPROPRIATE GROUND STABILIZATION.
11. ALL STREETS ADJACENT TO THE SITE SHALL BE KEPT FREE OF DIRT, MUD AND DEBRIS.
12. CONTRACTORS SHALL MINIMIZE BARE EARTH SURFACES DURING CONSTRUCTION.
13. ALL DISTURBED AREAS SHOULD BE SEEDED OR SODDED WITHIN THREE (3) DAYS OF FINAL DISTURBANCE.
14. WHENEVER DURING CONSTRUCTION OPERATIONS ANY LOOSE MATERIALS ARE DEPOSITED IN THE FLOW LINE OF GUTTERS, DRAINAGE STRUCTURES, OR DITCHES SUCH THAT THE NATURAL FLOW LINE OF WATER IS OBSTRUCTED, THIS LOOSE MATERIAL SHALL BE REMOVED.
15. ALL SEDIMENT SHALL BE PREVENTED FROM ENTERING ANY EXISTING STORM DRAINAGE SYSTEMS BY THE USE OF INLET PROTECTION OR OTHER APPROVED FUNCTIONAL METHODS. THE CONTRACTOR SHALL BE RESPONSIBLE FOR REMOVING SEDIMENT RESULTING FROM CONSTRUCTION ACTIVITIES ASSOCIATED WITH THIS PROJECT.
16. CONSTRUCTION ACCESS POINTS TO THE SITE SHALL BE PROTECTED IN SUCH A WAY AS TO PREVENT TRACKING OF MUD OR SOIL ONTO PUBLIC THOROUGHFARES. ALL SEDIMENT SPILLED, DROPPED, WASHED OR TRACKED ONTO PUBLIC RIGHTS-OF-WAY MUST BE REMOVED IMMEDIATELY BY THE CONTRACTOR.
17. ALL CONSTRUCTION TRAFFIC SHALL ENTER AND EXIT THE SITE FROM THE PROPOSED CONSTRUCTION ENTRANCE. THE USE OF ANY OTHER ACCESSES IS PROHIBITED.
18. DURING DEWATERING OPERATIONS, WATER SHALL BE PUMPED OR OTHERWISE DISCHARGED FROM THE SITE INTO SEDIMENT BASINS, SILT TRAPS, DEWATERING BAGS OR POLYMER MIXING SWALE. DEWATERING DIRECTLY INTO FIELD TILES, WETLANDS, ADJACENT PROPERTIES, PUBLIC RIGHTS-OF-WAY, STREAMS, LAKES, PONDS, RIVERS, OR STORMWATER SYSTEMS IS PROHIBITED.
19. ALL STOCKPILES SHOULD BE STABILIZED WITHIN THREE (3) DAYS OF FORMING THE STOCKPILE.
20. STABILIZATION MEASURES SHALL BE INITIATED AS SOON AS PRACTICABLE IN PORTIONS OF THE SITE WHERE CONSTRUCTION ACTIVITIES HAVE TEMPORARILY OR PERMANENTLY CEASED, BUT IN NO CASE MORE THAN SEVEN (7) DAYS AFTER THE CONSTRUCTION ACTIVITY IN THAT PORTION OF THE SITE HAS TEMPORARILY OR PERMANENTLY CEASED AS FOLLOWS:
   - 20.1. WHERE THE INITIATION OF STABILIZATION MEASURES BY THE 7TH DAY AFTER CONSTRUCTION ACTIVITY TEMPORARILY OR PERMANENTLY CEASES ON A PORTION OF THE SITE IS PRECLUDED BY SNOW COVER, STABILIZATION MEASURES SHALL BE INITIATED AS SOON AS PRACTICABLE.
   - 20.2. WHERE CONSTRUCTION ACTIVITY WILL RESUME ON A PORTION OF THE SITE WITHIN 14 DAYS FROM WHEN ACTIVITIES CEASED, (I..E. THE TOTAL TIME PERIOD THAT CONSTRUCTION ACTIVITY IS TEMPORARILY CEASED IS LESS THAN 14 DAYS) THEN STABILIZATION MEASURES DO NOT HAVE TO BE INITIATED ON THAT PORTION OF THE SITE BY THE 7TH DAY AFTER CONSTRUCTION ACTIVITY TEMPORARILY CEASES.
21. EROSION CONTROL BLANKETS SHALL BE USED IN AREAS OF 6:1 SLOPE OR STEEPER AND AS SHOWN ON THE PLANS.
22. ALL DISTURBED GREEN SPACES WITHIN THE R.O..W. SHALL BE RESTORED WITH 6" OF TOPSOIL AND CLASS 2A SEEDING.
23. THE CONDITION OF THE CONSTRUCTION SITE FOR WINTER SHUTDOWN SHALL BE ADDRESSED EARLY IN THE FALL GROWING SEASON SO THAT THE SLOPES AND OTHER BARE EARTH AREAS MAY BE STABILIZED WITH TEMPORARY AND/OR PERMANENT VEGETATIVE COVER FOR PROPER EROSION AND SEDIMENT CONTROL. ALL OPEN AREAS THAT ARE TO REMAIN IDLE THROUGHOUT THE WINTER SHALL RECEIVE TEMPORARY EROSION CONTROL MEASURES INCLUDING TEMPORARY SEEDING, MULCHING AND/OR EROSION CONTROL BLANKET PRIOR TO THE END OF THE FALL GROWING SEASON. THE AREAS TO BE WORKED BEYOND THE END OF THE GROWING SEASON MUST INCORPORATE SOIL STABLIZATION MEASURES THAT DO NOT RELY ON VEGETATIVE COVER SUCH AS EROSION CONTROL BLANKET AND HEAVY MULCHING.
24. ONCE ALL UPSTREAM AREAS ARE STABILIZED WITH SEED AND BLANKET OR SOD AS SHOWN IN THE PLANS, SILT FENCING SHALL BE REMOVED AND THE TRENCH SHALL BE RESTORED WITH TOPSOIL, SEED, FERTILIZER AND BLANKETING. RESTORATION SHALL OCCUR IMMEDIATELY FOLLOWING THE REMOVAL OF THE SILT FENCE. RESTORATION SHALL BE COMPLETED THE SAME WORKING DAY AS ANY SILT FENCING REMOVAL AND AT LEAST 2 HOURS BEFORE ANY FORECASTED PRECIPITATION.
25. ALL TEMPORARY EROSION CONTROL AND SEDIMENT CONTROL MEASURES SHALL BE REMOVED THIRTY (30) DAYS AFTER FINAL SITE STABILIZATION IS ACHIEVED OR AFTER THE TEMPORARY MEASURES ARE NO LONGER NEEDED. TRAPPED SEDIMENT SHALL BE PROPERLY STABILIZED OR DISPOSED OFF BY THE CONTRACTOR.

JAMES GLASCOTT
REGISTERED
PE12400652
STATE OF INDIANA
PROFESSIONAL ENGINEER

WT GROUP JOB NUMBER - C2400072
WT GROUP
Structural | Mechanical/Electrical/Plumbing
Civil | Land Survey | Telecommunication| Aquatic
Accessibility Consulting | Design & Program Management
Engineering with Precision, Pace & Passion.
2675 Pratum Avenue | Hoffman Estates, IL 60192
P: 224.293.6333 | F: 224.293.6444
wtengineering.com
WT Group
Engineering • Design • Consulting

©COPYRIGHT 2025 THE W-T GROUP, LLC

DLA Ltd. ARCHITECTS
www.dla-ltd.com
form follows learning SM
Two Pierce Place | Suite 1300 | Itasca | 60143 | 847.742.4063

SCHOOL TOWN OF MUNSTER
2025 NEW TENNIS FACILITY
MUNSTER HIGH SCHOOL
8823 COLUMBIA AVE. MUNSTER, IN 46321

SCHOOL TOWN of MUNSTER

DATE:	DESCRIPTION:
9/15/25	TOWN SUBMITTAL

ISSUED FOR BID

PROJECT # 2024.073
DATE: AUGUST 12, 2025
SHEET TITLE: PROJECT SPECIFICATIONS
SHEET: C-7.0

TOPOGRAPHICAL SURVEY

Additional Survey Related Notes:

1. Dimensions on this plat are expressed in feet and decimal parts thereof, and are measured values, unless otherwise noted.

2. This survey does not address the existence, if any, of items that would require an interpretation by the surveyor, (I.E. compliance with all zoning requirements) existence of items beyond the qualification of survey (I.E. wetlands, hazardous material) and items not readily visible during a reasonable inspection of site (past cemeteries, landfills, and mineral rights).

3. Parcels identified by title description or record references as per 865 IAC 1-12-13-(11) are obtained from County Auditor's Office and/or Recorder's Office and are not certified. The information may or may not reference the most current deed or record or the most current status or title for that parcel.

NORTH

GRAPHIC SCALE

40 0 20 40 80 160

(IN FEET)
1 INCH = 40 FT.

LEGEND:

- MANHOLE
- CATCH BASIN/INLET
- CURB DRAIN
- PIPE INLET/OUTLET
- DRAIN
- BEEHIVE CATCH BASIN
- PIPELINE MARKER
- POWER POLE
- POWER POLE w/ LIGHT
- POWER POLE / ANCHOR
- LIGHT POLE
- GAS VALVE
- B-BOX
- FIRE HYDRANT
- WATER VALVE
- WATER SPIGOT
- SIGN
- FIBER OPTIC MARKER
- TRAFFIC LIGHT POLE
- TRAFFIC MANHOLE
- COMMUNICATIONS VAULT
- ELECTRIC TRANSFORMER
- ELECTRIC PANEL
- ELECTRIC VAULT
- ELECTRIC JUNCTION BOX
- ELECTRIC METER
- VENT PIPE
- IRRIGATION CONTROL VALVE
- SOIL BORING
- GAS LINE-FLAGGED
- STEEL BOLLARD
- GAS METER
- FLAG POLE
- CLEAN OUT
- EXISTING TREE W/ TRUNK DIA.
- EXST. CONTOUR
- 600.00 EXISTING SPOT ELEVATION
- OVERHEAD LINES
- SANITARY LINE
- STORM SEWER LINE
- WATER MAIN LINE
- GAS LINE-FLAGGED
- UNDERGROUND-ELECTRIC LINE
- UNDERGROUND TELE. LINE

STATE OF INDIANA } §
COUNTY OF LAKE }

THIS IS NOT A BOUNDARY SURVEY
In accordance with 865 IAC 1-12-12(f): This drawing is not intended to be represented as a retracement or original boundary survey, a route survey, or a Surveyor Location Report.

DATE OF SURVEY: MAY 20, 2025

JOHN STUART ALLEN REGISTERED No. LS29900011 STATE OF INDIANA LAND SURVEYOR

TORRENGA SURVEYING, LLC.

JOHN STUART ALLEN - Registered Land Surveyor No. LS29900011

TORRENGA SURVEYING, LLC
PROFESSIONAL LAND SURVEYORS
907 RIDGE ROAD, MUNSTER, INDIANA 46321
TEL. NO.: (219) 836-8918
WEBSITE: WWW.TORRENGA.COM

TOPOGRAPHICAL SURVEY
WILBUR WRIGHT MIDDLE SCHOOL
8520-8830 COLUMBIA AVENUE

DATE: JUNE 25, 2025
REVISIONS:

CLIENT: School Town of Munster
JOB NO: 2025-0109
DRAWN: SLD
SCALE: 1" = 40'

SHEET 1 OF 3

FILE NO: Z:\Munster High School 2024\dwg\2025-0109.dwg 5/20/2025 1:37:04 PM CDT

TOPOGRAPHICAL SURVEY

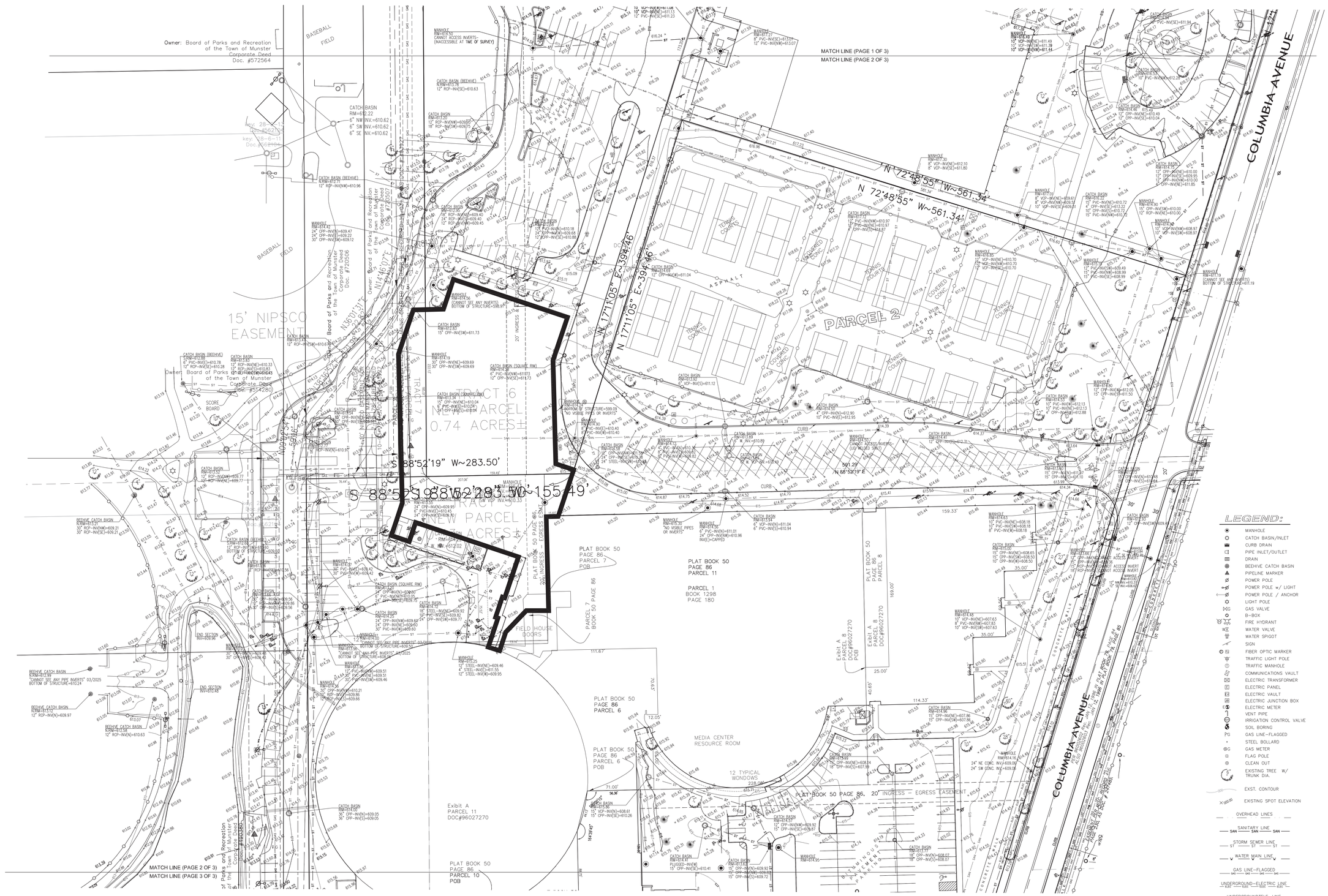

Additional Survey Related Notes:

1. Dimensions on this plat are expressed in feet and decimal parts thereof, and are measured values, unless otherwise noted.
2. This survey does not address the existence, if any, of items that would require an interpretation by the surveyor, (I.E. compliance with all zoning requirements) existence of items beyond the qualification of survey (I.E. wetlands, hazardous material) and items not readily visible during a reasonable inspection of site (past cemeteries, landfills, and mineral rights).
3. Parcels identified by title description or record references as per 865 IAC 1-12-13-(11) are obtained from County Auditor's Office and/or Recorder's Office and are not certified. The information may or may not reference the most current deed or record or the most current status or title for that parcel.

NORTH

GRAPHIC SCALE

40 0 20 40 80 160

(IN FEET)
1 INCH = 40 FT.

STATE OF INDIANA } §
COUNTY OF LAKE }

THIS IS NOT A BOUNDARY SURVEY
In accordance with 865 IAC 1-12-12(f): This drawing is not intended to be represented as a retracement or original boundary survey, a route survey, or a Surveyor Location Report.

DATE OF SURVEY: MAY 20, 2025

TORRENGA SURVEYING, LLC.

JOHN STUART ALLEN - Registered Land Surveyor No. LS29900011

JOHN STUART ALLEN REGISTERED No. LS29900011 STATE OF INDIANA LAND SURVEYOR

LEGEND:

- MANHOLE
- CATCH BASIN/INLET
- CURB DRAIN
- PIPE INLET/OUTLET
- DRAIN
- BEEHIVE CATCH BASIN
- PIPELINE MARKER
- POWER POLE
- POWER POLE w/ LIGHT
- POWER POLE / ANCHOR
- LIGHT POLE
- GAS VALVE
- B-BOX
- FIRE HYDRANT
- WATER VALVE
- WATER SPIGOT
- SIGN
- FIBER OPTIC MARKER
- TRAFFIC LIGHT POLE
- TRAFFIC MANHOLE
- COMMUNICATIONS VAULT
- ELECTRIC TRANSFORMER
- ELECTRIC PANEL
- ELECTRIC VAULT
- ELECTRIC JUNCTION BOX
- ELECTRIC METER
- VENT PIPE
- IRRIGATION CONTROL VALVE
- SOIL BORING
- GAS LINE-FLAGGED
- STEEL BOLLARD
- GAS METER
- FLAG POLE
- CLEAN OUT
- EXISTING TREE W/ TRUNK DIA.
- EXST. CONTOUR
- EXISTING SPOT ELEVATION
- OVERHEAD LINES
- SANITARY LINE
- STORM SEWER LINE
- WATER MAIN LINE
- GAS LINE-FLAGGED
- UNDERGROUND-ELECTRIC LINE
- UNDERGROUNDTELE. LINE

TORRENGA SURVEYING, LLC
PROFESSIONAL LAND SURVEYORS
907 RIDGE ROAD, MUNSTER, INDIANA 46321
TEL. NO.: (219) 836-8918
WEBSITE: WWW.TORRENGA.COM

TOPOGRAPHICAL SURVEY

WILBUR WRIGHT MIDDLE SCHOOL
8520-8830 COLUMBIA AVENUE

DATE: JUNE 25, 2025
REVISIONS:

CLIENT: School Town of Munster
JOB NO: 2025-0109
DRAWN: SLD
SCALE: 1" = 40'

FILE NO: Z:\Munster High School 2024\dwg\2025-0109.dwg 5/20/2025 1:37:04 PM CDT

TOPOGRAPHICAL SURVEY

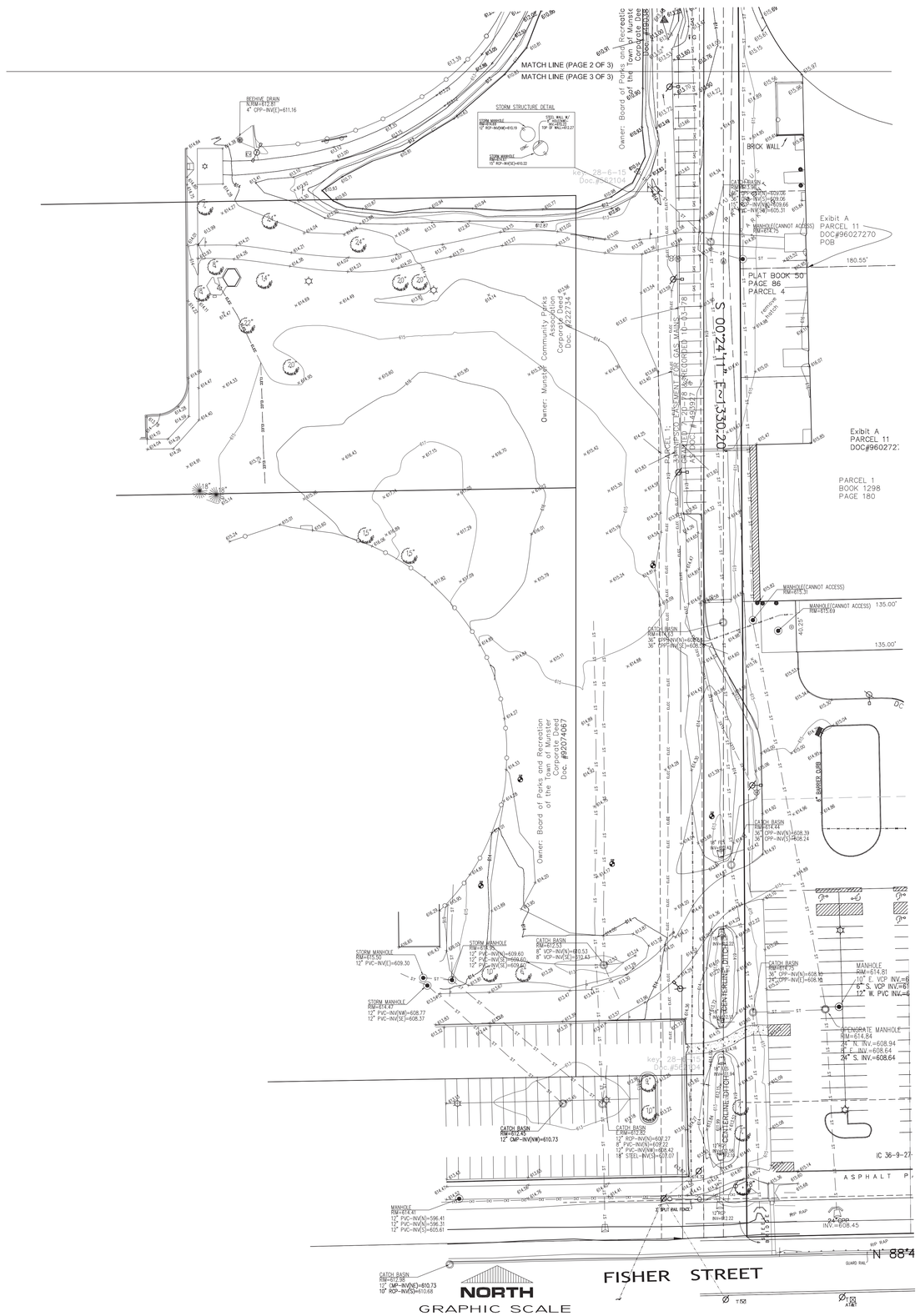

LEGEND:

- MANHOLE
- CATCH BASIN/INLET
- CURB DRAIN
- PIPE INLET/OUTLET
- DRAIN
- BEEHIVE CATCH BASIN
- PIPELINE MARKER
- POWER POLE
- POWER POLE w/ LIGHT
- POWER POLE / ANCHOR
- LIGHT POLE
- GAS VALVE
- B-BOX
- FIRE HYDRANT
- WATER VALVE
- WATER SPIGOT
- SIGN
- FIBER OPTIC MARKER
- TRAFFIC LIGHT POLE
- TRAFFIC MANHOLE
- COMMUNICATIONS VAULT
- ELECTRIC TRANSFORMER
- ELECTRIC PANEL
- ELECTRIC VAULT
- ELECTRIC JUNCTION BOX
- ELECTRIC METER
- VENT PIPE
- IRRIGATION CONTROL VALVE
- SOIL BORING
- GAS LINE-FLAGGED
- STEEL BOLLARD
- GAS METER
- FLAG POLE
- CLEAN OUT
- EXISTING TREE W/ TRUNK DIA.
- EXST. CONTOUR
- EXISTING SPOT ELEVATION
- OVERHEAD LINES
- SANITARY LINE
- STORM SEWER LINE
- WATER MAIN LINE
- GAS LINE-FLAGGED
- UNDERGROUND-ELECTRIC LINE
- UNDERGROUNDTELE. LINE

STATE OF INDIANA } §
COUNTY OF LAKE }

THIS IS NOT A BOUNDARY SURVEY
In accordance with 865 IAC 1-12-12(f): This drawing is not intended to be represented as a retracement or original boundary survey, a route survey, or a Surveyor Location Report.

DATE OF SURVEY: MAY 20, 2025

TORRENGA SURVEYING, LLC.

JOHN STUART ALLEN - Registered Land Surveyor No. LS29900011

JOHN STUART ALLEN REGISTERED No. LS29900011 STATE OF INDIANA LAND SURVEYOR

Additional Survey Related Notes:

1. Dimensions on this plat are expressed in feet and decimal parts thereof, and are measured values, unless otherwise noted.
2. This survey does not address the existence, if any, of items that would require an interpretation by the surveyor, (I.E. compliance with all zoning requirements) existence of items beyond the qualification of survey (I.E. wetlands, hazardous material) and items not readily visible during a reasonable inspection of site (past cemeteries, landfills, and mineral rights).
3. Parcels identified by title description or record references as per 865 IAC 1-12-13-(11) are obtained from County Auditor's Office and/or Recorder's Office and are not certified. The information may or may not reference the most current deed or record or the most current status or title for that parcel.

FILE NO: Z:\Munster High School 2024\dwg\2025-0109.dwg 5/20/2025 1:37:04 PM CDT

TORRENGA SURVEYING, LLC
PROFESSIONAL LAND SURVEYORS
907 RIDGE ROAD, MUNSTER, INDIANA 46321
TEL. NO.: (219) 836-8918 WEBSITE: WWW.TORRENGA.COM

TOPOGRAPHICAL SURVEY
WILBUR WRIGHT MIDDLE SCHOOL
8520-8830 COLUMBIA AVENUE

DATE: JUNE 25, 2025
REVISIONS:

CLIENT: School Town of Munster
JOB NO: 2025-0109
DRAWN: SLD
SCALE: 1" = 40'

SHEET 3 OF 3